GENERAL

The front fork consists of two telescoping outer tube/inner slider assemblies. Each assembly has an internal compression spring which supports the forward weight of the vehicle and rider. The compression spring extends and retracts to cushion the ride over rough or irregular road surfaces. An oil filled damping mechanism controls the telescoping action of each tube/slider assembly.

See 1.15 SUSPENSION DAMPING ADJUSTMENTS for more information.

REMOVAL

1. Raise front wheel off floor using procedure under 1.17 STEERING HEAD BEARINGS.
2. Detach front brake caliper from rotor. See 2.11 FRONT BRAKE CALIPER
3. Remove front wheel. See 2.5 FRONT WHEEL
4. Remove front fender. See 2.31 FRONT FENDER.
5. Loosen left and right headlamp brackets.
6. Loosen the four large pinch screws on both the upper and lower triple clamps.
7. Remove front forks through bottom of triple clamps.

DISASSEMBLY

NOTE

To prevent change in set position of damping force adjuster needle, do not loosen the lock nut.

1. See Figure 2-55. Loosen the fork bolt (1) (metric) from the outer tube and slightly compress the fork leg. Remove the fork bolt with attached O-ring (2).
2. See Figure 2-56. Set the FRONT FORK SPRING COMPRESSOR (Part No. B-43875) (1) onto the spring collar (2). Push down on the collar and remove the spring seat stopper (3).
3. See Figure 2-57. Remove the spring collar (4), the spring joint (5) and the spring (7).
4. Remove the fork oil by pumping the fork leg and rod 8-10 times until the rod moves freely.
5. Clamp the axle holder in a vise with soft jaws or use a shop towel. Remove the center bolt (19) (metric) and the special washer (18).

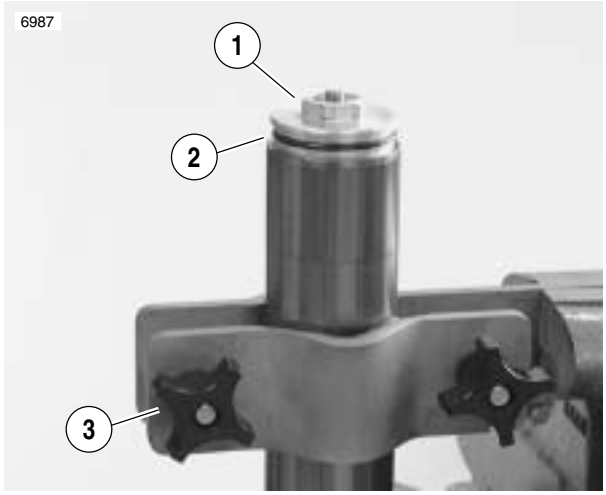

1. **Fork Bolt (metric)**
2. **O-Ring**
3. **Front Fork Holding Tool**

Figure 2-55. Fork Bolt

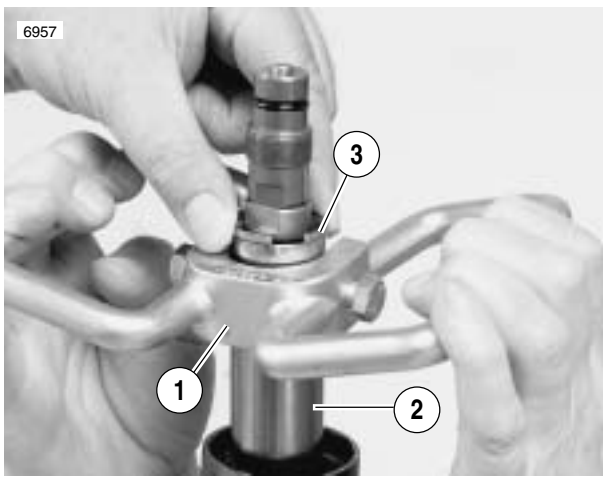

1. **Fork Spring Compressor**
2. **Spring Collar**
3. **Spring Seat Stopper**

Figure 2-56. Front Fork Spring Compressor

1. Fork Bolt
2. O-Ring
3. Spring Seat Stopper
4. Spring Collar
5. Spring Joint
6. O-Ring
7. Spring
8. Outer Tube
9. Guide Bushing
10. Seal Spacer
11. Oil Seal
12. Stopper Ring
13. Dust Seal
14. Damper Assembly
15. Centering Plate
16. Slide Bushing
17. Slide Pipe
18. Special Washer
19. Center Bolt
20. Mounting Bolt

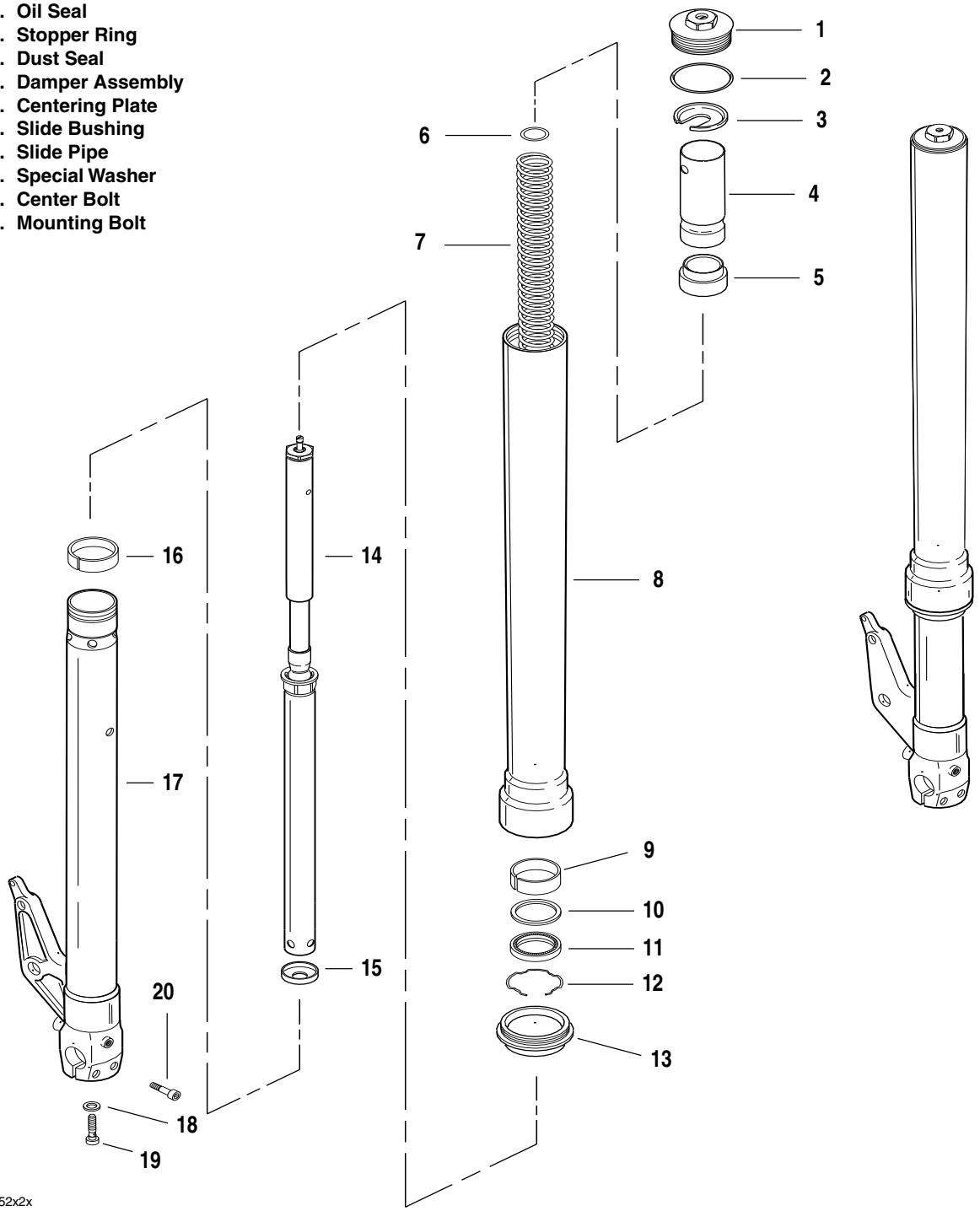

Figure 2-57. Front Fork Assembly

6. Remove the damper (14) and the centering plate (15) from the slide pipe (17).

⚠WARNING

Be careful not to scratch the slide pipe or the outer tube. Improperly operating forks may lead to a loss of control and death or serious injury.

7. Remove the dust seal (13) and the stopper ring (12) from the outer tube (8).

8. Pull the slide pipe (17) out of the outer tube (8).

9. See Figure 2-58. Remove the guide bushing (1), seal spacer (2), oil seal (3) stopper ring (4), and the dust seal (5) from the slide pipe.

10. Remove the slide bushing (6) by prying the slide bushing at the split.

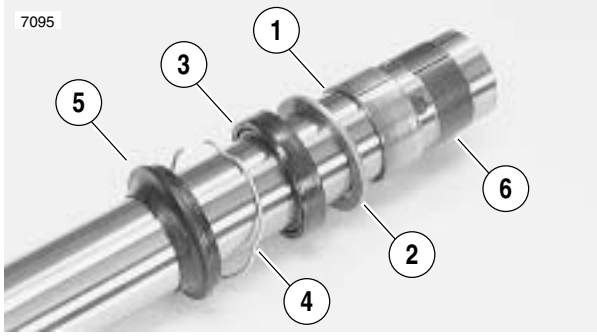

1. **Guide Bushing**
2. **Seal Spacer**
3. **Oil Seal**
4. **Stopper Ring**
5. **Dust Seal**
6. **Slide Bushing**

Figure 2-58. Slide Pipe Components

CLEANING AND INSPECTION

1. Thoroughly clean and inspect all parts. Replace any parts that are bent, broken or damaged.

2. See Figure 2-57. Check the slide pipe (17) and outer tube (8) for score marks, scratches and excessive or abnormal wear. Replace if worn or damaged.

3. Check the slide bushing (16) and the guide bushing (9) for excessive wear or scratches. Replace if damaged or worn.

4. Replace the stopper ring (12) if distorted.

5. Measure spring (7) free length. Replace springs shorter than service wear limit of 9.13 in. (232 mm).

6. See Figure 2-59. Measure slide pipe runout. Replace pipe if runout exceeds the service wear limit of 0.008 in. (0.2 mm).

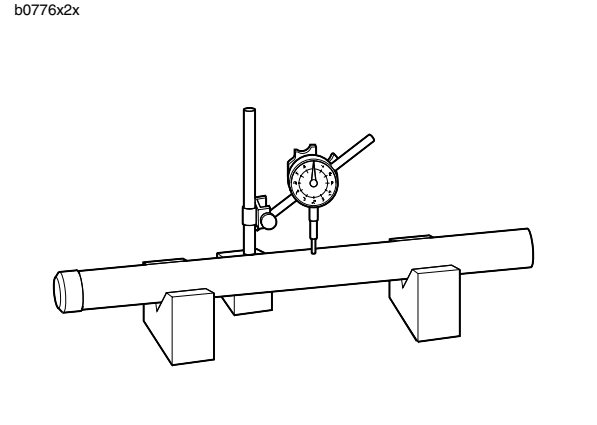

Figure 2-59. Pipe Runout

ASSEMBLY

1. See Figure 2-60. Wrap the end of the slide pipe and the slide bushing channel with tape to avoid damaging the oil seal lip when installing.

2. See Figure 2-58. Install a **new** dust seal (5) and stopper ring (4) onto the slide pipe.

3. Coat the sealing lips of the **new** oil seal (3) with fork oil or sealing grease and install onto the slide pipe with its marked side facing the dust seal (5). Remove the tape from the slide pipe end.

4. Install the seal spacer (2), the guide bushing (1) and the slide bushing (6) onto the slide pipe.

5. Coat the slide bushing (6) and the guide bushing (1) with fork oil.

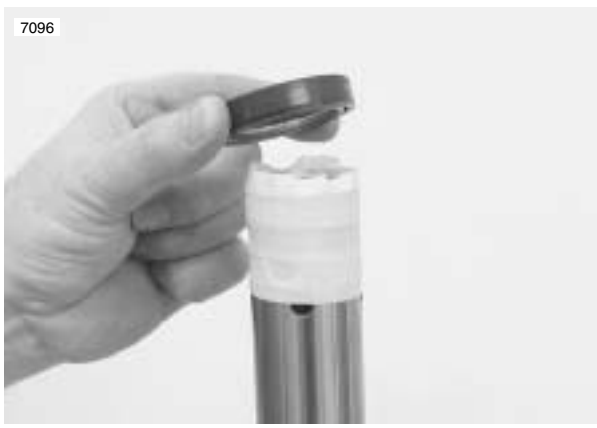

Figure 2-60. Slide Pipe Protection

CAUTION

The outer tube can move freely up and down on the slide pipe. Always hold both the slide pipe and outer tube to prevent damage to bushings and seals.

6. See Figure 2-57. Carefully place the slide pipe (17) into the outer tube (8).

7. Move and tape or tie the dust seal (13) and stopper ring (12) out of the way.

8. Using FORK SEAL DRIVER (Part No. B-43721), drive the guide bushing (9) with the seal spacer (10) and oil seal (11) into position in the outer tube (4). See Figure 2-61.

9. See Figure 2-57. Remove any tape or ties and reinstall the stopper ring (12) and a **new** dust seal (13).

10. Place the centering plate (15) onto the damper (14) and insert the assembly into the slide pipe (17).

11. Clamp the axle holder in a vise with soft jaws or use a shop towel. Replace the special washer (18) and center bolt (19) (metric). Tighten the center bolt to 22-29 ft-lbs (30-39 Nm).

NOTE

The recommended fork oil is hydraulic fork oil Type "E".

12. While supporting the fork, pour one-half of the recommended amount of fork oil, 8 oz. (225 cc), into the fork pipe.

13. Pump the piston rod and leg slowly at least 10 times, about 6 in. (150 mm) strokes.

14. Place the piston rod and outer tube (8) in the full bottomed position.

15. See Figure 2-62. Pour the recommended fork oil into the slide pipe to a level between the maximum and minimum limits. Additional information on setting oil levels can be found under 1.16 FRONT FORK.

16. See Figure 2-63. Install the spring, with the taper side at top, and the spring collar and spring joint.

17. See Figure 2-56. Place FRONT FORK SPRING COMPRESSOR (1) into position and press down on the spring collar (2).

18. Set the spring seat stopper (3) between the spring collar (2) and the locknut. Remove the FRONT FORK SPRING COMPRESSOR.

19. See Figure 2-55. Apply oil to a **new** O-ring and install it into position on the fork bolt. Install fork bolt. Tighten to 22-29 ft-lbs (30-39 Nm).

20. Tighten rebound adjuster against the fork bolt.

21. Set rebound and compression adjusters to factory positions. See 1.15 SUSPENSION DAMPING ADJUSTMENTS.

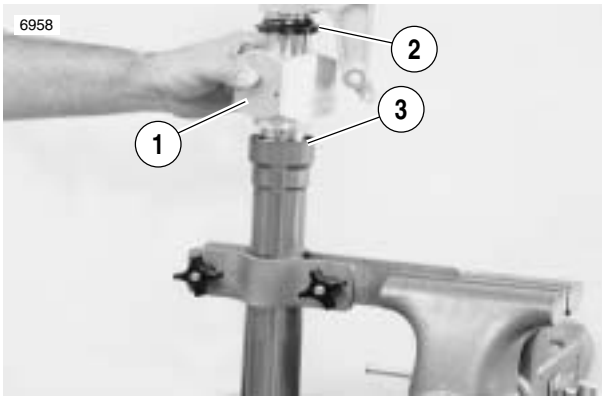

1. **Fork Seal Driver**
2. **Guide Bushing with Seal Spacer**
3. **Outer Tube**

Figure 2-61. Fork Seal Driver

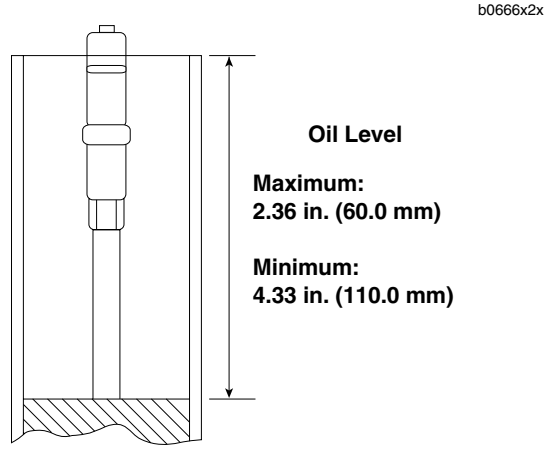

Figure 2-62. Oil Level Measurement

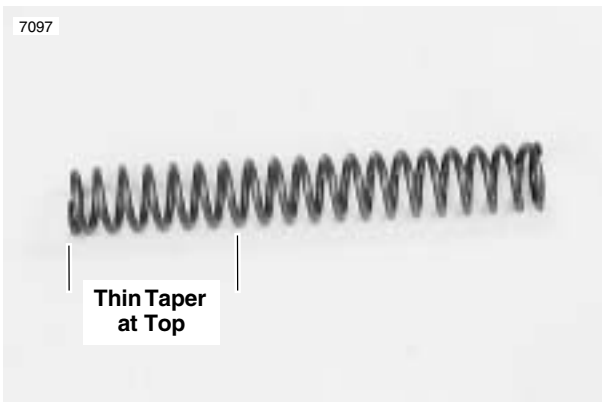

Figure 2-63. Spring Installation

INSTALLATION

1. Insert fork tubes through triple clamps and headlamp brackets.

NOTE

When installing the front forks, use a suitable tool to pry apart the triple clamps.

2. See Figure 2-64. Spread LOCTITE ANTI-SEIZE on the last three threads of all five triple clamp pinch screws. Loosely install triple clamp fasteners. If removed, small screw (1) installs at rear of upper triple clamp.
3. See Figure 2-65. Align and secure fork tubes.
   a. Position fork tubes so that top of each slider tube is flush with the top surface of upper triple clamp. Be sure that top surface of fork is not below top surface of upper triple clamp.
   b. Position top of headlamp brackets 2.0 in. (50.8 mm) below upper triple clamp.
   c. Tighten large screws to 18-20 ft-lbs (24-27 Nm).
   d. Tighten small screw to 10-12 ft-lbs (14-16 Nm) if loosened during fork stem service.
4. Install front fender. See 2.31 FRONT FENDER.
5. Install front wheel. See 2.5 FRONT WHEEL.
6. Install front brake caliper. See 2.11 FRONT BRAKE CALIPER.
7. Align headlamp. See 1.23 HEADLAMP.
8. Adjust front forks to rider preferences. See 1.15 SUSPENSION DAMPING ADJUSTMENTS.

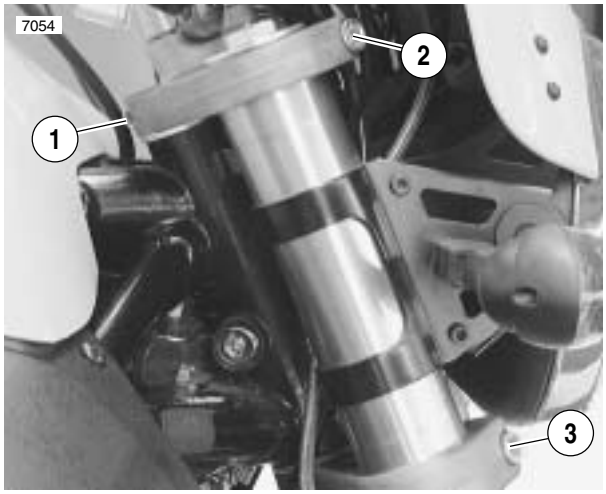

1. **Small Upper Triple Clamp Screw**
2. **Large Upper Triple Clamp Screw (2)**
3. **Large Lower Triple Clamp Screw (2)**

Figure 2-64. Front Fork Fasteners

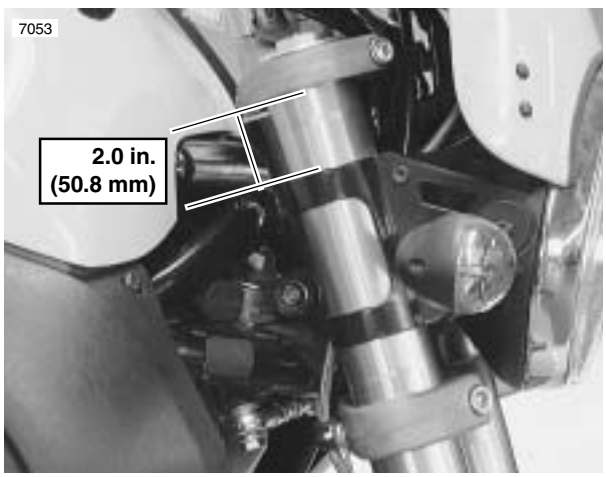

Figure 2-65. Aligning Front Forks

FORK STEM AND BRACKET ASSEMBLY 2.17

REMOVAL/DISASSEMBLY

1. Remove steering head lock. See 2.18 STEERING HEAD LOCK.
2. Remove fork assemblies. See 2.16 FRONT FORK.
3. Detach instrument support and handlebars. See 2.26 INSTRUMENT SUPPORT.
4. See Figure 2-66. Remove all upper triple clamp screws (7, 11), fork stem bolt (1) and upper triple clamp (2).
5. Remove upper dust shield (3) and roller bearing (4).
6. Remove lower roller bearing.
   a. Remove two lower triple clamp screws (7). Pull the lower triple clamp (6) downward.
   b. The lower bearing cone is a press fit on fork stem. Chisel through outer bearing cage to allow rollers to fall free.
   c. Apply heat to remove the remaining portion of bearing cone. Continuously move flame around its entire circumference until bearing falls free.
   d. Remove lower dust shield (3).
7. If replacement of bearing cups (5) is necessary, drive cups from steering head using STEERING HEAD BEARING RACE REMOVER (Part No. HD-39301A) and UNIVERSAL DRIVER HANDLE (Part No HD-33416).

CLEANING AND INSPECTION

See 1.15 SUSPENSION DAMPING ADJUSTMENTS for adjustment procedures.

1. See Figure 2-66. Clean the dust shields (3), bearing cups (5), fork stem and lower triple clamp (6) and frame with solvent.
2. Carefully inspect bearing races and assemblies for pitting, scoring, wear and other damage. Replace damaged bearings (4) as a set (3, 4 and 5).
3. Check the fork stem and lower triple clamp (6) for damage. Replace if necessary.

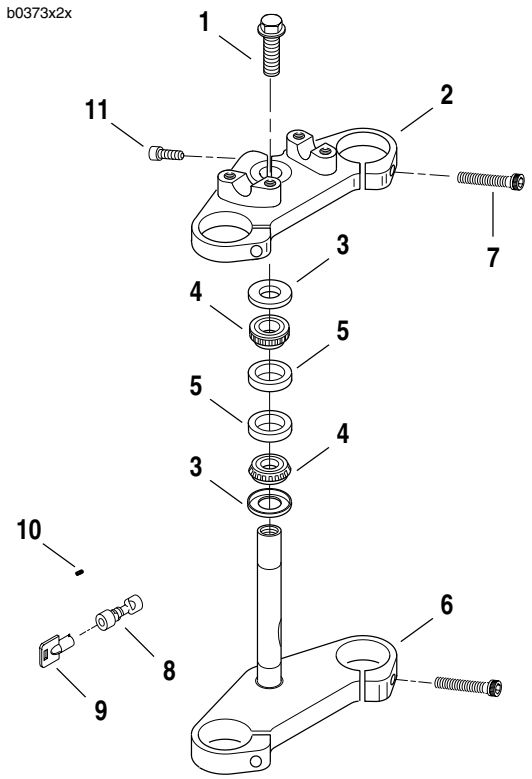

1. **Fork Stem Bolt**
2. **Upper Triple Clamp**
3. **Dust Shield (2)**
4. **Roller Bearing (2)**
5. **Bearing Cup (2)**
6. **Lower Triple Clamp**
7. **Screw (4)**
8. **Steering Head Lock**
9. **Steering Lock Key**
10. **Set Screw**
11. **Screw**

Figure 2-66. Fork Stem

ASSEMBLY/INSTALLATION

1. See Figure 2-67. If removed, install **new** bearing cups into frame steering head using STEERING HEAD BEARING RACE INSTALLER (Part No. HD-39302).
2. See Figure 2-66. Liberally coat the bearing cones (4) with grease using WHEEL BEARING PACKER TOOL (Part No. HD-33067). Work the grease into the rollers.
3. Install lower bearing.
   a. Place lower bearing dust shield (3) over fork stem.
   b. Find a section of pipe having an inside diameter slightly larger than the outside diameter of the fork stem.
   c. Press bearing (4) with small end up onto fork stem and lower triple clamp (6). Use the pipe as a press-on tool.
4. Insert lower triple clamp (6) through the steering head. Install the upper bearing (4) with small end down and dust shield (3) onto fork stem.
5. See Figure 2-68. Apply LOCTITE ANTI-SEIZE to fork stem bolt (1). Loosely install upper triple clamp (2) using fork stem bolt.
6. Install fork assemblies. See 2.16 FRONT FORK.
7. Install steering head lock. See 2.18 STEERING HEAD LOCK.
8. Install instrument support and handlebars. See 2.26 INSTRUMENT SUPPORT.
9. Check adjustment.
   a. Tighten fork stem bolt (1). Check bearing adjustment to set fork stem bolt to proper tension. See 1.17 STEERING HEAD BEARINGS.
   b. Make sure the fork stem turns freely, then tighten the fork stem clamp screw (3).

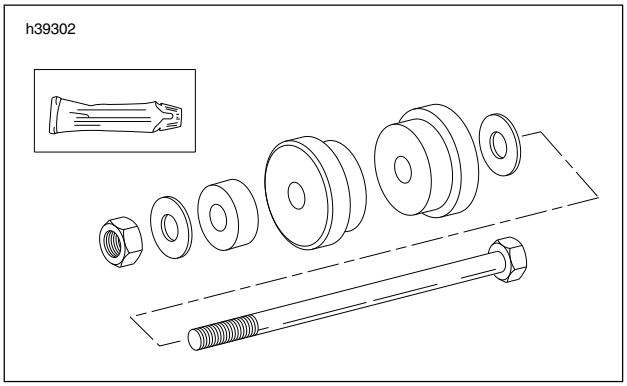

Figure 2-67. Steering Head Bearing Race Installer

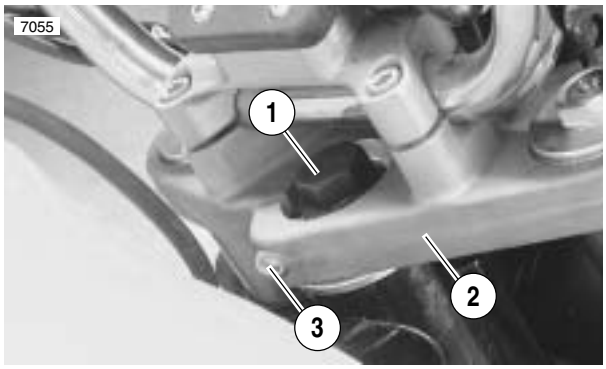

1. **Fork Stem Bolt**
2. **Upper Triple Clamp**
3. **Fork Stem Clamp Screw**

Figure 2-68. Fork Stem Clamp Screw

STEERING HEAD LOCK 2.18

REMOVAL

NOTE

Steering head lock is not repairable. Replace the unit if it fails.

1. Raise front wheel off floor using procedure under 1.17 STEERING HEAD BEARINGS.
2. Remove four screws and washers to detach windscreen.
3. Loosen handlebars.
   a. Place protective cloth over fuel tank cover and headlamp.
   b. See Figure 2-69. Remove the two front clamp screws.
   c. Remove both rear clamp screws and instrument support.
   d. Place handlebar assembly on headlamp without stretching the attached cables.
4. Loosen the three upper triple clamp screws.
5. See Figure 2-69. Slowly loosen fork stem bolt until forks drop 0.5 in. (12.7 mm) in triple clamps.
6. See Figure 2-70. Remove set screw behind lock.
7. Extract steering head lock from fork stem.
   a. Insert fork key in lock.
   b. Lift front wheel upward.
   c. Twist key to pull steering head lock from fork stem.
   d. Release front wheel.

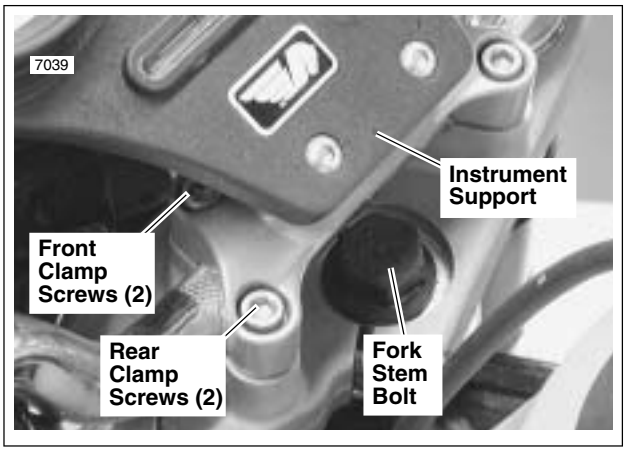

Figure 2-69. Loosening Handlebars

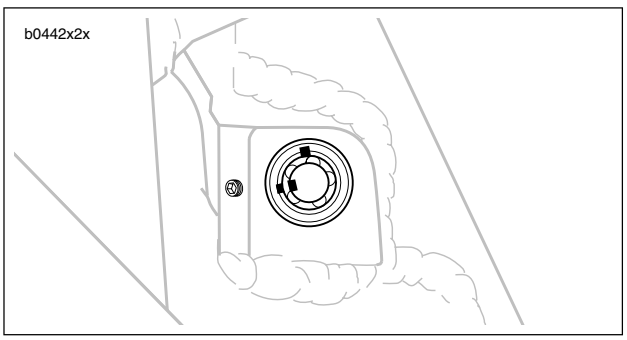

Figure 2-70. Set Screw

INSTALLATION

1. Install steering head lock in fork stem.
   a. See Figure 2-71. Dished area of steering head lock faces front wheel.
   b. Lift front wheel upward.
   c. See Figure 2-70. Lock must be in the unlocked position to install. Insert lock with key openings positioned as shown.
   d. Release front wheel.
2. Install and adjust handlebars. See 1.22 HANDLEBARS.
3. See Figure 2-69. Tighten fork stem bolt and triple clamp screws. Check bearing adjustment. See 1.17 STEERING HEAD BEARINGS.

⚠WARNING

Do not operate vehicle with steering head locked. This will restrict the vehicle's turning ability which could result in death or serious injury.

4. Install set screw in lock. Test lock.
   a. Turn handlebars all the way to the left.
   b. Insert ignition key in lock.
   c. Turn key clockwise while pushing in.
   d. Remove key and verify that steering head is locked.
   e. Unlock steering head by inserting key and turning key counterclockwise.

Figure 2-71. Steering Head Lock

REMOVAL

NOTE

Mark all hardware as it is removed so that it may be returned to its original location.

1. Compress suspension to access rear fender fasteners. Remove rear fender and lower belt guard. See 2.32 REAR FENDER.
2. Place vehicle on a lift and anchor front wheel in place.

⚠WARNING

To protect agsint shock and accidental start-up of vehicle, disconnect the negative battery cable before proceeding. Inadequate safety precautions could result in death or serious injury.

⚠WARNING

Always disconnect the negative battery cable first. If the positive battery cable should contact ground with the negative cable installed, the resulting sparks may cause a battery explosion which could result in death or serious injury.

3. Disconnect **both** battery cables, negative cable first.
4. Remove seat and attach lifting straps to motorcycle. Insert lifting straps through opening on tail section near tail section mounting bolts.
5. Attach lifting straps to a floor hoist placed behind the lift. Raise motorcycle off lift until rear suspension is unloaded.
6. Remove mounting bolt attaching swingarm to rear shock.
7. Remove rear wheel.
8. Remove cap from oil tank and drain oil.
9. Detach feed line from bottom of oil tank.
10. Detach rear brake pedal from master cylinder pushrod.
11. Remove left side rider footrest and shifter lever.
12. See Figure 2-72. Place a jack under the crankcase.
13. Detach rear tie bar from swingarm.
14. See Figure 2-73. Remove left and right isolator bolts and washers (7).

CAUTION

Remove oil filter before raising frame. Without removal, oil filter will be damaged during procedure.

15. Place a drip pan under the oil filter. Remove oil filter.
16. Using floor hoist, raise frame enough to remove both rubber isolators (6) from frame mounted pins.
17. Loosen swingarm pinch screw (4) on right side.
18. Remove threaded rod (1) from between bearing adjusting bolts (2, 3).

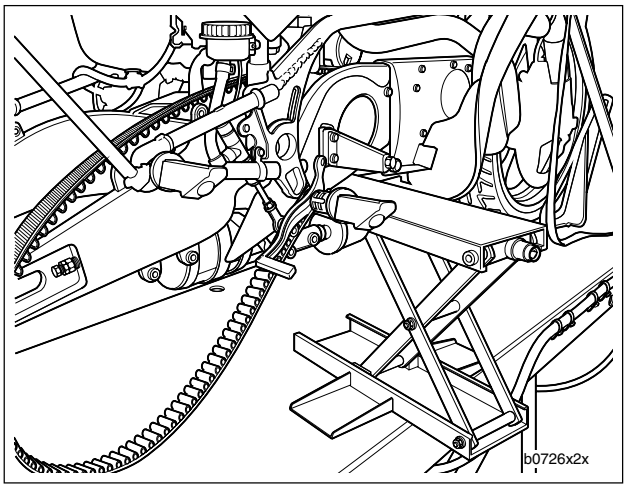

Figure 2-72. Scissors Jack (Typical)

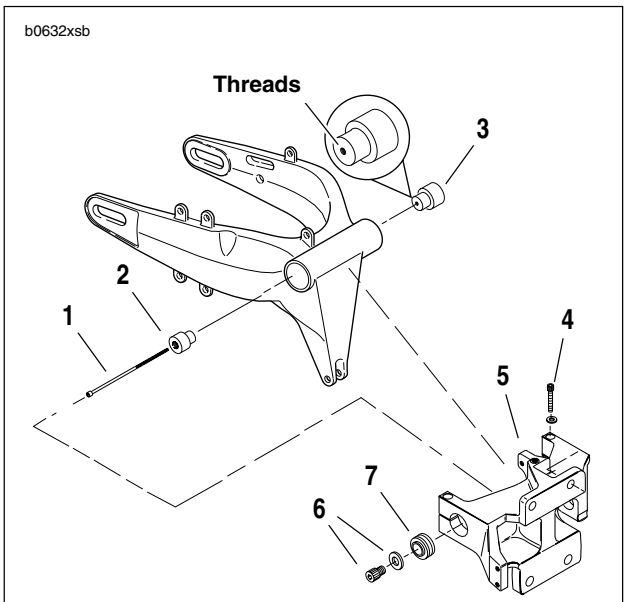

1. **Threaded Rod**
2. **Bearing Adjustment Bolt (Right)**
3. **Bearing Adjustment Bolt (Left, Threaded)**
4. **Pinch Screw and Washer (2)**
5. **Swingarm Mount Block**
6. **Isolator TORX Bolt and Washer (2)**
7. **Rubber Isolator (2) (Typical)**

Figure 2-73. Swingarm Assembly

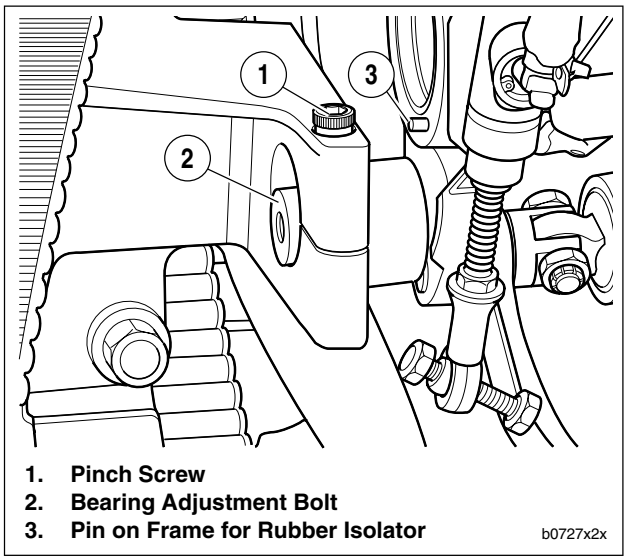

1. **Pinch Screw**
2. **Bearing Adjustment Bolt**
3. **Pin on Frame for Rubber Isolator**

Figure 2-74. Swingarm Mount Block, Right Side

19. Loosen remaining swingarm pinch screw.
20. See Figure 2-74. Using floor hoist, raise frame while pushing down on swingarm. Frame must be raised until bearing adjustment bolts (2) clear pin on frame and can be removed.
21. See Figure 2-79. Working on the right side first, insert the REAR ISOLATOR REPLACEMENT TOOL (Part No. B-44623) between mount block and frame. NOTE: Ledge on tool should engage top of mount block.
22. After removing both bearing adjustment bolts, remove swingarm.

DISASSEMBLY

CAUTION

Carefully mark all bearing components as they are removed, so that they may be returned to their original locations. Do not intermix bearing components.

1. See Figure 2-75. Remove and discard both swingarm seals (3).
2. Remove roller bearings (4).

NOTE

Remove roller bearing cups (5) only if replacement is required. The complete bearing assembly must be replaced as a unit when replacement is necessary. Do not intermix bearing components.

3. See Figure 2-76. Carefully press roller bearing cups from swingarm using STEERING HEAD BEARING RACE REMOVER (Part No. HD-39301A) and UNIVERSAL DRIVER HANDLE (Part No. HD-33416).

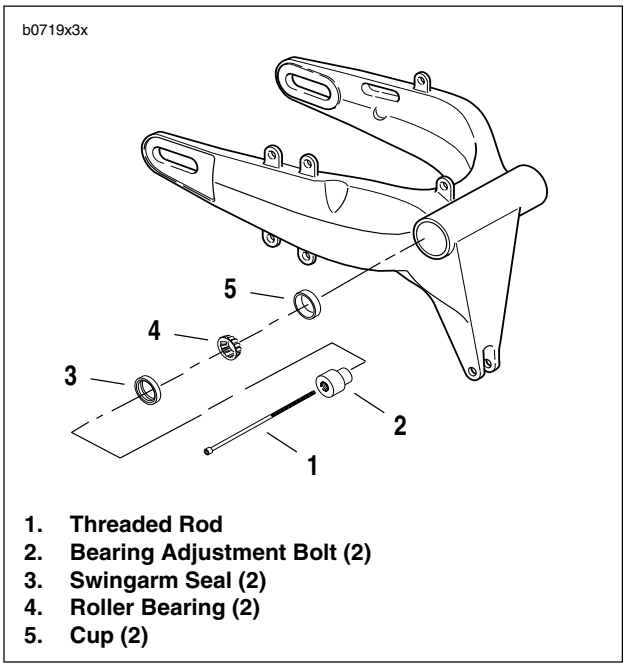

1. **Threaded Rod**
2. **Bearing Adjustment Bolt (2)**
3. **Swingarm Seal (2)**
4. **Roller Bearing (2)**
5. **Cup (2)**

Figure 2-75. Swingarm Bearings

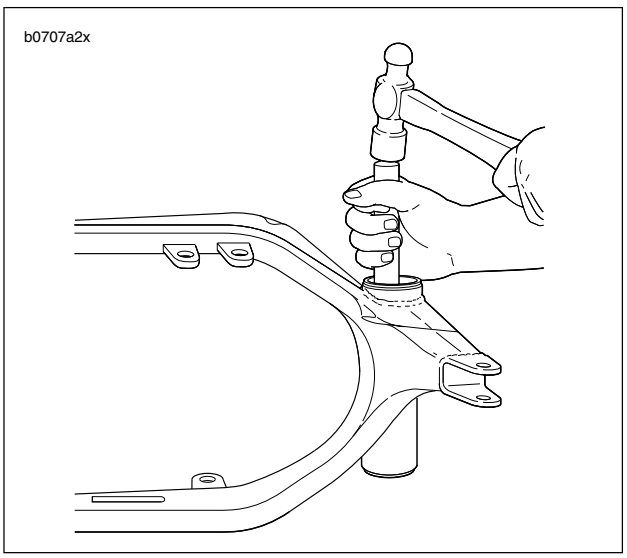

Figure 2-76. Removing Roller Bearing Cups

CLEANING AND INSPECTION

1. Thoroughly clean all components in solvent. Blow dry with compressed air.
2. Carefully inspect all bearing components for wear and/or corrosion. Replace complete bearing assembly if any component is damaged.
3. Check that swingarm is not bent or twisted. Replace if damaged.

ASSEMBLY

1. See Figure 2-77. If necessary, draw **new** roller bearing cups into swingarm using BEARING INSTALLATION BOLT (Part No. B-35316-5) and STEERING HEAD BEARING RACE INSTALLER (Part No. HD-39302).

NOTE

Roller bearing assemblies should be replaced as a unit. Do not intermix components. Mark all components so they may be correctly installed.

2. Coat bearing components with WHEEL BEARING GREASE (Part No. HD-99855-89) and assemble.
3. See Figure 2-75. Install **new** swingarm seals (3) flush to the swingarm.
4. Slide swingarm assembly into position.

NOTE

See Figure 2-73. The left side bearing adjustment bolt (3) has additional internal threads.

5. Install bearing adjustment bolts (2, 3).
   a. Apply LOCTITE THREADLOCKER 222 (purple) to the threaded rod (1).
   b. Insert the rod through the right side bearing adjusting bolt (2).
   c. Install and tighten left bearing adjustment bolt (3) (with internal threads) on left side of swingarm.
   d. Tighten the left pinch screw (4) on the swingarm mount block (5). Do not tighten the right side pinch screw at this time.
   e. Insert rod through swingarm into left side bearing adjustment bolt. Tighten to an initial torque of 10-13 ft-lbs (14-18 Nm).

INSTALLATION

1. See Figure 2-73. Align **new** swingarm between posts on swingarm mount block (5).
2. Insert left (threaded) and right bearing adjustment bolts (2, 3) into swingarm until flush with mount block surface.
3. Tighten left side swingarm pinch screw (4) to 18-20 ft-lbs (24-27 Nm).
4. Install threaded rod (1).
   a. Apply LOCTITE THREADLOCKER 222 (purple) to threaded rod.
   b. Insert threaded rod through right side bearing adjustment bolt (2) into threads on left side bolt (3).
   c. Tighten rod to an initial torque of 10-13 ft-lbs (14-18 Nm).
5. Check swingarm preload using a scale as shown in Figure 2-78. Preload should be 3.0-3.75 lbs (1.36-1.70 kg). If preload does not meet specifications, tighten or loosen threaded rod and recheck.

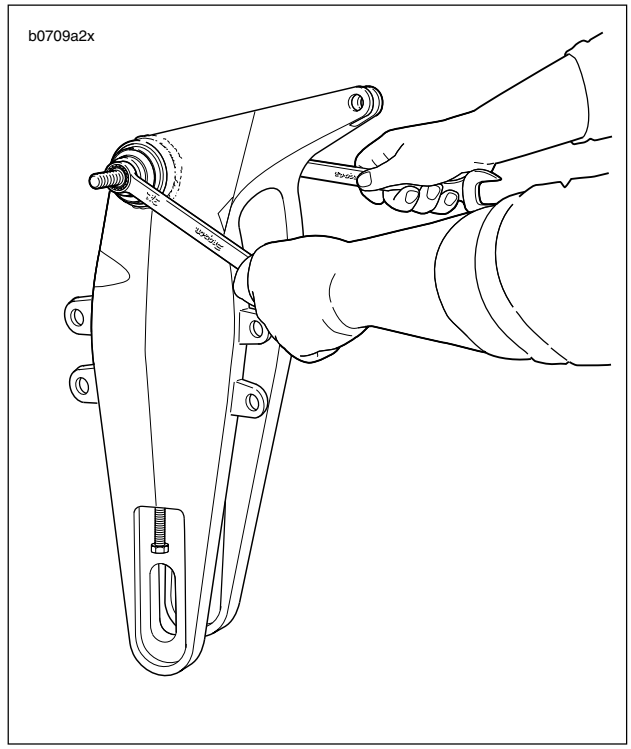

Figure 2-77. Installing Bearings into Swingarm

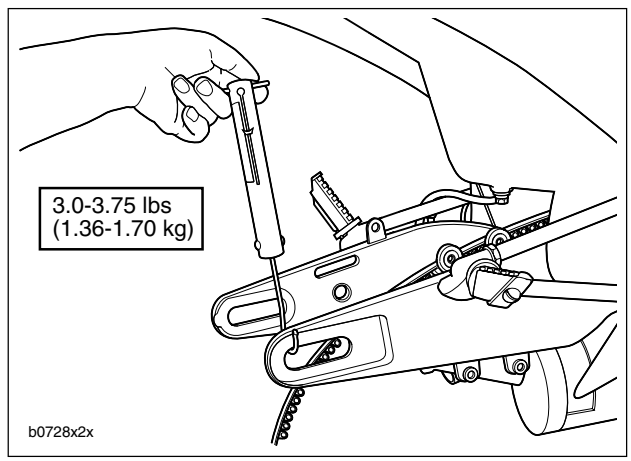

Figure 2-78. Checking Preload

6. See Figure 2-74. Secure swingarm in place.
   a. Remove both pinch screws (1).
   b. Apply LOCTITE THREADLOCKER 243 (blue) to threads of pinch screws.
   c. Verify that swingarm is centered between mounts.
   d. Install both pinch screws. Tighten pinch screws to 18-20 ft-lbs (24-27 Nm).
7. Position rear isolators in mounting position. Slowly lower frame to place rubber isolators in front of bearing adjustment bolts.
8. Install isolator bolts. See 2.20 REAR ISOLATORS .
9. Attach rear tie bar to swingarm mount block. Tighten tie-bar bolt to 30-33 ft-lbs (41-45 Nm).
10. Remove scissors jack from under crankcase.
11. Install rear shock bolt (metric). Tighten to 30-33 ft-lbs (41-45 Nm).
12. Attach feed and drain lines to oil tank. Install filter and fill motorcycle with 2.5 quarts (2.37 liters) of recommended oil. See 1.6 ENGINE LUBRICATION SYSTEM.
13. Attach rear brake pedal to master cylinder pushrod.
14. Attach left side rider footrest and shifter lever. Apply LOCTITE THREADLOCKER 272 (red) to bolt. Tighten bolt to 23-25 ft-lbs (31-34 Nm).
15. Install rear wheel. See 2.6 REAR WHEEL.
16. Set axle alignment and belt deflection. See 1.11 DRIVE BELT DEFLECTION.
    a. See Figure 2-79. Check rear axle alignment.
    b. See Figure 2-80. Check belt deflection.
    c. Proceed to the next step when both axle alignment and belt deflection are correct.
17. See Figure 2-81. Tighten locknut (2) flush against nut (3). Tighten axle nut (metric) to 66-73 ft-lbs (90-99 Nm). Verify that belt deflection is correct. Lower motorcycle onto lift.

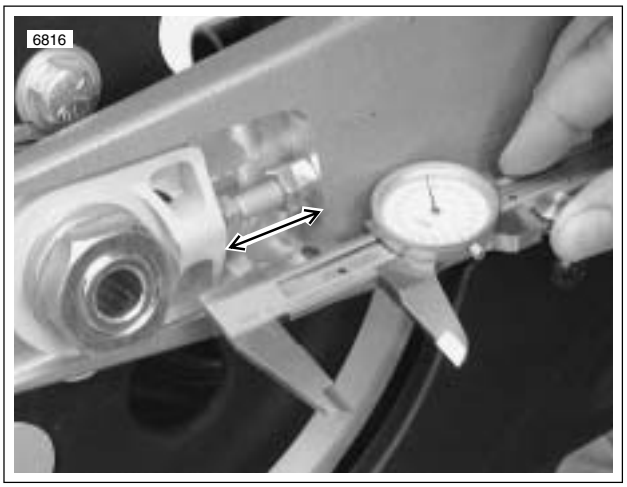

Figure 2-79. Checking Rear Wheel Alignment, Right Side Shown

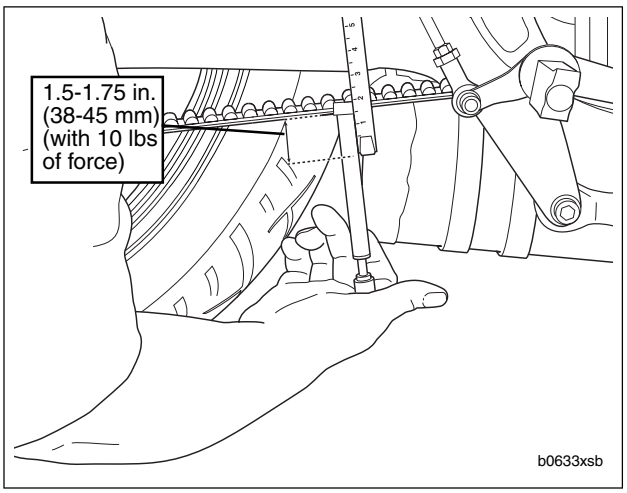

Figure 2-80. Belt Deflection

.

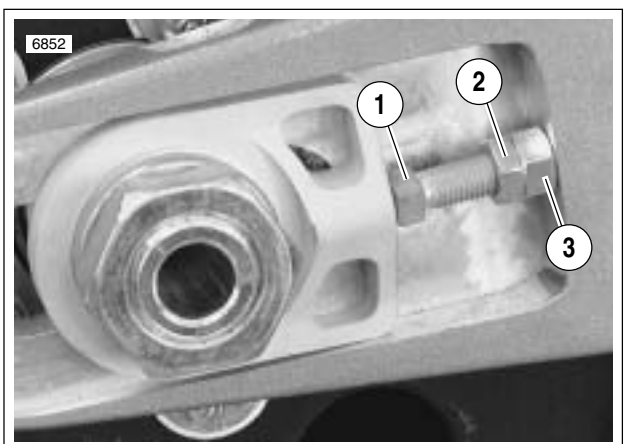

1. **Axle Adjuster Bolt**
2. **Locknut**
3. **Nut**

Figure 2-81. Axle Adjuster Bolt, Right Side Shown

⚠WARNING

After installing seat, pull upward on front of seat to be sure it is locked in position. If seat is loose, it could shift during vehicle operation and startle the rider, causing loss of control which could result in death or serious injury.

18. Remove lifting straps and install seat. See 2.40 SEAT.

⚠WARNING

Always connect positive battery cable first. If the positive cable should contact ground with the negative cable installed, the resulting sparks may cause a battery explosion which could result in death or serious injury.

19. Attach both battery cables, positive cable first.
20. Remove motorcycle from lift.
21. Compress suspension to install rear fender and lower belt guard. See 2.32 REAR FENDER.
22. Check oil level after starting motorcycle and allowing it to reach operating temperature.

⚠WARNING

After completing repairs or bleeding the system, always test motorcycle brakes at low speed. If brakes are not operating properly or braking efficiency is poor, testing at high speeds could result in death or serious injury.

23. Check rear brake operation.

REMOVAL

NOTE

Mark all hardware as it is removed so that it may be returned to its original location.

1. Position motorcycle on a suitable lift and secure front wheel to lift.

WARNING

To protect against accidental start-up of vehicle and possible personal injury, disconnect the negative battery cable before proceeding. Inadequate safety precautions could cause a battery explosion, which could result in death or serious injury.

2. Disconnect **negative** battery cable from battery terminal.
3. Remove seat, fuel tank cover and fuel tank. See 4.37 FUEL TANK.
4. See Figure 2-82. Strap frame, just forward of tail section, to overhead beam or hoist and put slight tension on strap to secure frame assembly.
5. See Figure 2-82. Remove frame side tie bar mounting hardware from front lower and center tie bars. Leave fourth tie bar (front upper) attached to both frame and engine. Discard locknuts.
6. See Figure 2-83. Remove rear tie bar bolt, lockwasher and washers from mount block. Discard lockwasher.
7. See Figure 2-83. Loosen left and right isolator bolts. Do not remove.
8. See Figure 2-82. Remove two screws, locknuts and right side passenger footrest mounting bracket from frame. Discard locknuts.
9. Remove screw and locknut from rear brake pedal that attaches actuator rod to rear brake master cylinder. Discard locknut.
10. Remove two screws that attach rear brake master cylinder to right side plate.
11. See Figure 2-82. Remove three screws, locknuts and right side plate from frame. Discard locknuts.
12. Remove nut and back out bolt (until flush with the mount block) from upper rear of muffler Z bracket attachment to swingarm mount block.
13. Remove right side isolator bolt, washer and isolator.
14. Remove left side isolator bolt and washer. .
15. Pull frame to left and remove isolator from 6 or 7 o'clock position.

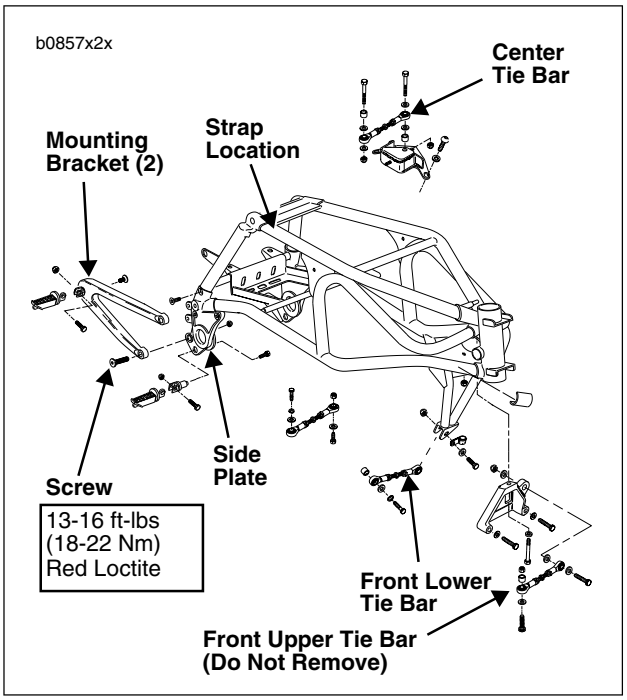

Figure 2-82. Frame Assembly, Tie Bars and Sideplate

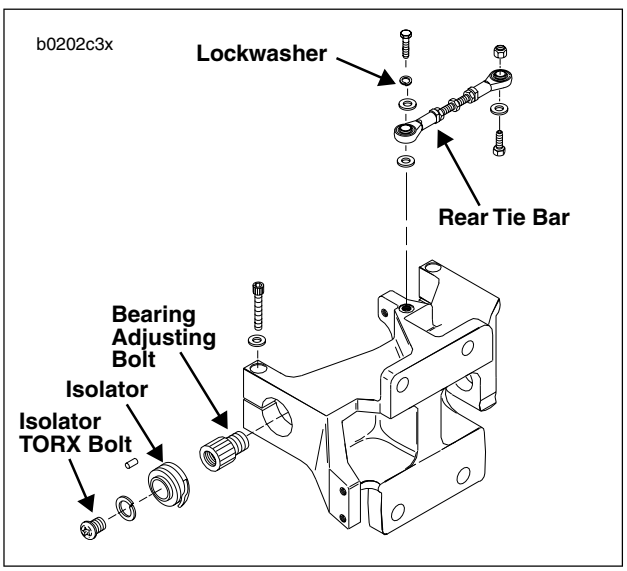

Figure 2-83. Mount Block

INSTALLATION

NOTE

If roll pin protrudes beyond specification, check to make sure it is fully seated. A channel lock pliers may be used to squeeze/push roll pin in. Protect sideplate with a shop rag when using pliers.

1. See Figure 2-84. Measure isolator roll pin protrusion on both left and right isolator mounts with calipers or metal rule. Roll pin should not protrude more than 0.120 in. (3 mm). If roll pin protrudes more than 0.120 in. (3 mm) file or grind until within specification; 0.080-0.120 in. (2.032-3.048 mm). Use care when filing to avoid creating sharp edges.
2. See Figure 2-83. On left side of motorcycle, align locator hole with roll pin and install rear isolator.

CAUTION

Use caution when installing isolator bolts. Make sure isolator bolt hole is aligned with threaded hole in bearing adjusting bolt to avoid cross-threading bolt.

3. See Figure 2-83. Loosely install isolator TORX bolt and washer through rubber isolator into bearing adjusting bolt. Do not tighten.
4. On right side plate, align locator hole with roll pin and install rear isolator.
5. See Figure 2-85. Mark a horizontal line across the front of each isolator with a light colored grease pencil or by other non-permanent means.
6. Apply anti-seize to underside of isolator bolt head.

CAUTION

Use caution when installing isolator bolts. Make sure isolator bolt hole is aligned with threaded hole in bearing adjusting bolt to avoid cross-threading bolt.

7. Install isolator TORX bolt and washer through rubber isolator into bearing adjustment bolt. Do not tighten.
8. See Figure 2-82. Install right side plate with three screws and locknuts. Tighten side plate mount screws to 16-19 ft-lbs (22 -26 Nm).

CAUTION

See Figure 6. Observe marked line on rubber isolator after isolator bolt is tightened. If marked line twists, apply more LOCTITE ANTI-SEIZE to underside of isolator bolt heads. Failure to comply will result in damage to rubber isolators.

9. Tighten right and left isolator TORX bolts to 63-70 ft-lbs (85-95 Nm).
10. Push rear upper Z bracket bolt until it protrudes from mount block and install nut. Tighten rear upper Z-bracket bolt to 8-10 ft-lbs (11-14 Nm).
11. Erase grease pencil marked lines from both isolators.
12. Apply LOCTITE 243 (Blue) to threads of two master cylinder mounting screws.
13. Install rear brake master cylinder to right side plate with two screws. Tighten screws to 8-10 ft-lbs (11-14 Nm).

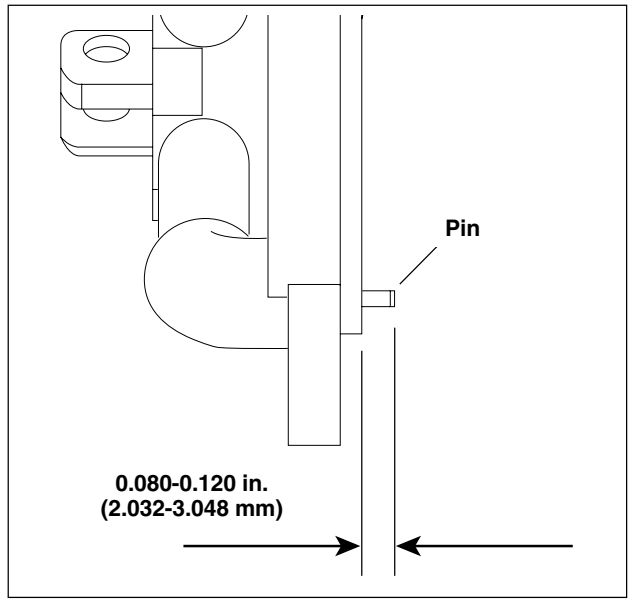

Figure 2-84. Measuring Roll Pin Protrusion

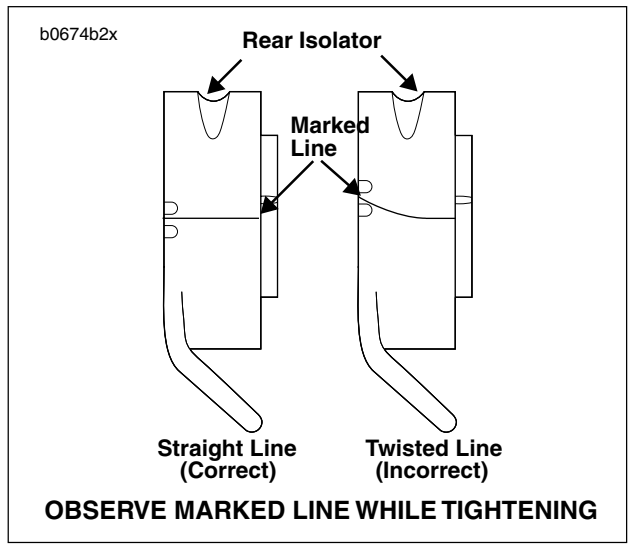

Figure 2-85. Checking Isolator Alignment

14. Install actuator rod to rear brake pedal with locknut (metric). Tighten locknut to 7-9 ft-lbs (10-12 Nm).
15. See Figure 2-82. Install right side passenger footrest mounting bracket with two screws and locknuts. Tighten screws to 13-16 ft-lbs (18-22 Nm).
16. See Figure 2-82. and Figure 2-83. Install front lower and center tie bars to frame with original locknuts. Tighten bolts to 30-33 ft-lbs (41-45 Nm). Install rear tie bar to mount block with lockwasher. Tighten bolt to 30-33 ft-lbs. (41-45 Nm).
17. Remove hoist from tail section.

⚠WARNING

After installing seat, pull upward on front of seat to be sure it is locked in position. If seat is loose, it could shift during vehicle operation and startle the rider, causing loss of control which could result in death or serious injury.

18. Install fuel tank, fuel tank cover and seat. See 4.37 FUEL TANK
19. Connect negative battery cable to negative battery terminal.

⚠WARNING

Check for proper brake lamp operation before riding motorcycle. Visibility is a major concern for motorcyclists. Failure to have proper brake lamp operation could result in death or serious injury.

20. Turn ignition key ON, depress rear brake pedal and check for proper brake light operation.
21. Test ride motorcycle at low speed and check for proper operation.

REAR SHOCK ABSORBER 2.21

GENERAL

See Figure 2-86. The rear suspension is controlled by the shock absorber. The shock allows adjustment of rear compression and rebound damping and spring preload.

The most important rear shock adjustment is the preload setting. Before making any damping adjustments, set the proper preload. See 1.14 PRELOAD ADJUSTMENT.

NOTE

The rear shock absorber contains no user serviceable parts.

REMOVAL

1. Lift rear wheel off ground using REAR WHEEL SUPPORT STAND (Part No. B-41174).
2. Remove chin fairing. See 2.34 CHIN FAIRING.
3. Remove seat and attach lifting straps to motorcycle. Insert lifting straps under frame tubes. It is not necessary to remove tail section. See 2.40 SEAT.
4. Attach lifting straps to a floor hoist placed behind the motorcycle. Raise motorcycle off lift until rear suspension is unloaded.
5. Use a flex socket and extension to remove locknut and washer from front reservoir clamp. Discard clamp and locknut.
6. Loosen rear reservoir clamp. Slide reservoir and mount block out of clamp. Remove and discard clamp.
7. See Figure 2-86. Remove allen screw (metric) and locknut on front mount. Discard locknut.
8. While supporting the shock absorber, remove the allen screw (metric) and locknut from the rear mount. Discard locknut.
9. Remove shock absorber assembly.

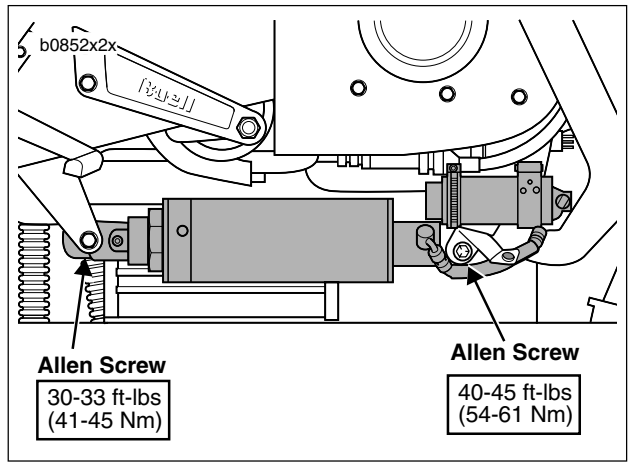

Figure 2-86. Shock Mounting Hardware (Chin Fairing Removed for Clarity)

INSTALLATION

1. See Figure 2-87. Place **new** bushings into mounting holes of shock absorber (if only replacing bushings).
2. See Figure 2-86. Loosely install rear allen screw (metric) and **new** locknut.
3. Loosely install front allen screw (metric) and **new** locknut.
4. Install rear clamp over front oil pump fitting.
5. Slide reservoir through rear clamp.
6. Position front clamp over reservoir and loosely install front reservoir clamp to front shock mount with washer and nylon locknut.
7. Install reservoir mount block between oil pump fitting and remote reservoir.
8. Tighten clamps around reservoir.

NOTE

Tighten front hardware from the screw side only. Tighten rear hardware from the nut side only.

9. Tighten front allen screw to 40-45 ft-lbs (54-61 Nm).
10. Tighten rear locknut to 30-33 ft-lbs (41-45 Nm).
11. Remove lifting straps and install seat. See 2.40 SEAT.

⚠WARNING

After installing seat, pull upward on front of seat to be sure it is locked in position. If seat is loose, it could shift during vehicle operation and startle the rider, causing loss of control which could result in death or serious injury.

12. Install chin fairing. See 2.34 CHIN FAIRING.
13. Check rear shock preload. See 1.14 PRELOAD ADJUSTMENT.

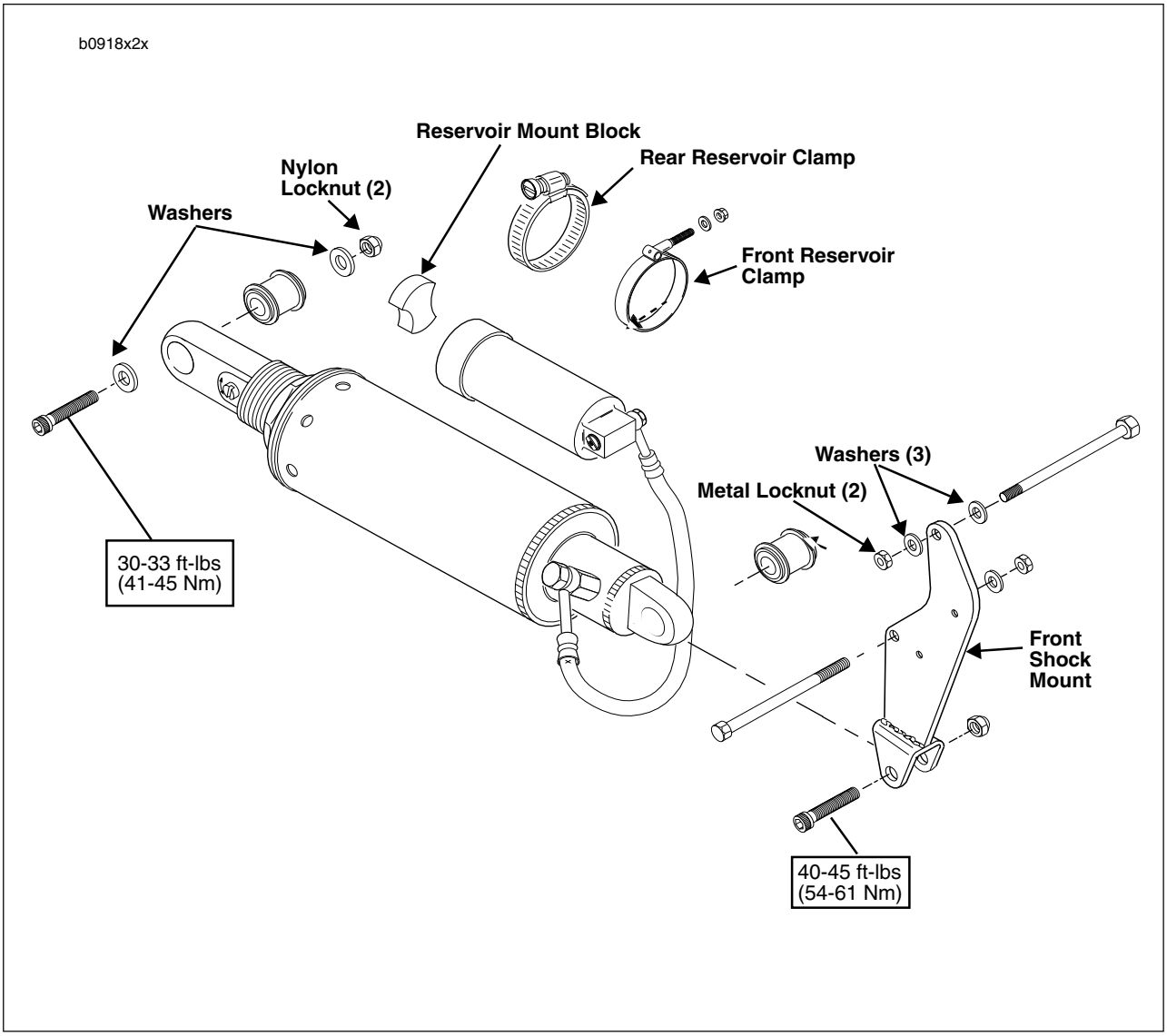

Figure 2-87. Rear Shock Absorber

DEFINITIONS

- **Damping:** Resistance to movement. Damping affects how easily the suspension can move and limits oscillation of the system once movement has begun.
- **Compression:** Suspension is compressed when the wheel moves upward.
- **Rebound:** The suspension is rebounding when it is moving back from being compressed.
- **Vehicle Sag:** The amount the rear shock and fork springs are compressed by the weight of the motorcycle.
- **Rider Sag:** The amount the rear shock and fork springs are compressed by the weight of the rider.
- **Preload:** An adjustment made to the rear shock and fork springs to limit vehicle sag and rider sag to a standard percentage of total suspension travel. Proper preload adjustment allows the suspension to absorb most bumps without bottoming.

GENERAL

⚠WARNING

Before evaluating and adjusting suspension settings, check the motorcycle's tires. Tires must be in good condition and properly inflated. Failure to check the tires could result in death or serious injury.

See Figure 2-88. See Figure 2-89. The rear suspension adjusts for compression and rebound damping and spring preload.

See Figure 2-90. The front suspension adjusts for compression and rebound damping.

If the rear preload adjustment is correct, and you have the rebound and compression damping set at the factory recommended points, the motorcycle should handle and ride properly. If you are unhappy with these settings they can be changed according to the following procedures.

NOTE

Evaluating and changing the rebound and compression damping is a very subjective process. Many variables affect motorcycle handling under different circumstances. Approach all changes carefully and consult Table 2-9.

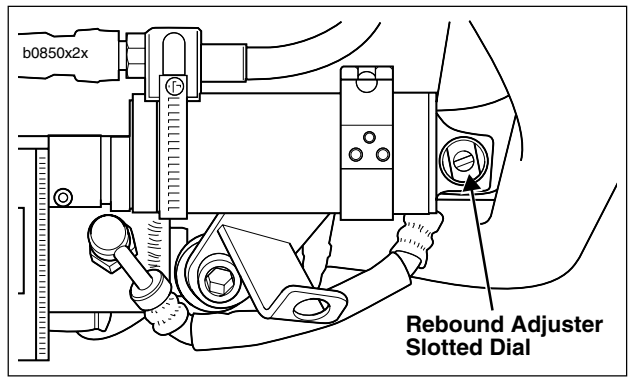

Figure 2-88. Shock Rebound Damping Adjustment

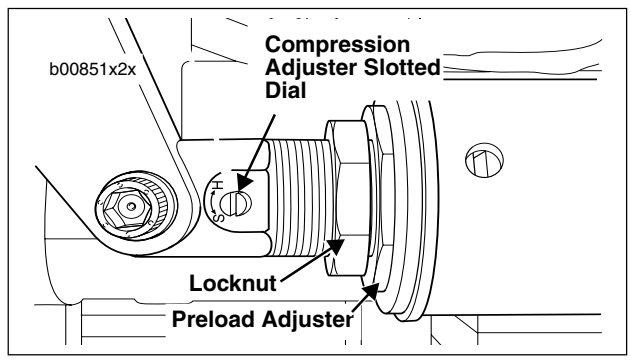

Figure 2-89. Preload and Compression Damping Adjustment

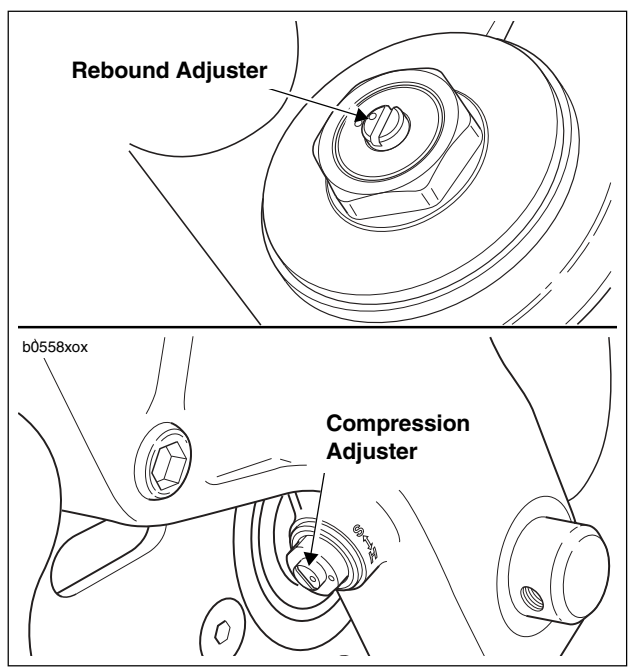

Figure 2-90. Preload and Compression Damping Adjustment

SPRING PRELOAD

Adjust rear spring preload before attempting any other adjustments. See 1.14 PRELOAD ADJUSTMENT. This setting assures that the rear suspension has the proper amount of travel for the rider's weight and the motorcycle's cargo load.

Make this adjustment before the motorcycle is ridden any distance. Your Buell dealer can assist you if necessary.

ADJUSTMENTS

Evaluating and changing the rebound and compression damping is a very subjective process. A good performing suspension finds a proper balance between spring, spring preload, damping, track conditions and riding speed. However, all settings are at best a compromise. If a rider fails to find a good set-up, go back to the factory recommended settings and start over again.

Make all suspension adjustments in one or two click increments. Adjusting more than one or two clicks at a time may cause you to skip the best adjustment. Test ride after each adjustment. When an adjustment makes no difference, return to the previous adjustment and try a different approach.

To find the optimum settings you will need the preload properly adjusted, the tires properly inflated and a familiar bumpy road. It is useful if the road contains a variety of different bumps from small sharp bumps such as potholes or frost heaves to large undulations. Begin the process by putting all the damping adjustments at the factory recommended settings. See Table 2-9. Ride the bike over a variety of different surfaces and bumps at different speeds. When the suspension is set properly the motorcycle will be stable and comfortable.

REAR SHOCK DAMPING ADJUSTMENTS

Beyond the rear preload adjustment, the rear shock can also be adjusted for compression and rebound damping. However, it is important to note the rear preload must be set correctly before performing any other adjustments.

See Figure 2-88. Adjust **rebound** damping using the slotted dial on the remote reservoir at the front of the shock.

- Factory setting-full damping minus 1.5 turn.

See Figure 2-89. Adjust **compression** damping using the slotted dial on the shaft at the end of the shock.

- Factory setting-full damping minus 2.25 turns.

Adjusting Rear Shock

1. Using a screwdriver, turn the slotted dial on the appropriate adjuster clockwise until it stops. This is the maximum damping setting for that adjustment.
2. Then turn the dial counterclockwise the recommended amount to align the reference marks. This is the factory recommended setting.

Recommended Damping Settings

SETTINGS	SOLO (STD)	2 UP	SOLO (FIRM)	SOLO (SOFT)
Front Rebound	0.5	1	0.5	1.5
Front Compression	1.25	1	1	MIN
Rear Rebound	1.5	0.5	0.5	3
Rear Compression	2.25	0.25	0.75	MIN

FRONT FORK DAMPING ADJUSTMENTS

See Figure 2-90. Adjust **rebound** damping using the slotted dial on the top of each fork leg.

- Factory setting-full damping minus 0.5 turn.

See Figure 2-90. Adjust **compression** damping using the slotted dial on the bottom of each fork leg.

- Factory setting-full damping minus 1.25 turns.

Adjusting Front Forks

⚠WARNING

Always adjust each fork leg to the same settings. Uneven adjustment between left and right forks may lead to a loss of control which could result in death or serious injury.

1. Using a screwdriver, turn the slotted dial on the appropriate adjuster clockwise until it stops. This is the maximum damping setting for that adjustment.
2. Then turn the dial counterclockwise the recommended amount to align the reference marks. This is the factory recommended setting.

TROUBLESHOOTING

⚠WARNING

This section is intended solely as a guide to diagnosing problems. Carefully read the appropriate sections of this manual before performing any work. Improper suspension adjustments could cause loss of control and result in death or serious injury.

The following tables list possible suspension and operating troubles and their probable causes.

When making adjustments, remember there are two mediums in setting up a bike, geometry and suspension. Both components work together because suspension is a part of geometry. In order to solve handling problems, it is important to diagnose the problem's true nature. Chattering, sliding or an uncomfortable feeling are suspension-related. Handling and a swinging fork are geometry-related, but often these unwanted characteristics can be solved by suspension adjustments.

Table 2-6. General Suspension Problems

TROUBLESHOOTING CONDITION	ADJUSTMENT SOLUTION
Bike wallows through turns. Feels loose or vague after bumps. Wheel tends to “pogo” after passing over a bump. This is noticeable by watching the bike continue to bounce as it travels over multiple bumps.	Increase rebound damping.
Wheel responds to bump, but doesn’t return to ground quickly after bumps. This is more pronounced over a series of bumps and is often referred to as “packing down.”	Reduce rebound damping.
The bike bottoms out or dips while cornering. Bike has excessive brake dive.	Increase compression damping.
Harsh ride particularly over washboard surfaces. Bumps kick through handlebars or seat. Suspension seems not to respond to bumps. This is evidenced by tire chattering (a movement with short stroke and high frequency) through corners or by jolting the rider over rough roads.	Reduce compression damping.

Table 2-7. Rear Suspension Problems

TROUBLESHOOTING CONDITION	ADJUSTMENT SOLUTION
“Pumping on the Rear” occurs when you are accelerating out of a corner. This problems occurs in two varieties. 1. The first type has a movement with a long stroke and a high frequency. 2. The second version has a movement with a short stroke and high frequency.	1. The shock is too soft. Increase compression damping. If the adjuster is already set to the maximum, add more preload to the spring (one turn maximum). 2. In this case the shock is too hard. Decrease compression damping.
Chattering during braking.	Decrease the compression damping. If the problem persists, decrease rebound damping for a faster rebound rate. Less spring preload may also help.
Lack of tire feedback.	The suspension is too soft. Increase compression damping.
Sliding during cornering. Sliding may occur going into the corner or accelerating out of the corner.	The suspension is too hard. Decrease compression damping.

Table 2-8. Front Suspension Problems

TROUBLESHOOTING CONDITION	ADJUSTMENT SOLUTION
Not absorbing bumps.	A good suspension is a balance between damping and track condition. Finding this balance requires exploring all possible compression settings.
Lack of tire feedback.	Increase compression damping.
Tire slides.	Decrease compression damping.

Table 2-9. Rider Suspension Preferences

NOTE

All adjustments require rear shock preload to be properly adjusted for the rider's size and weight. For information on setting rear shock preload, see 1.14 PRELOAD ADJUSTMENT.

DATE	FRONT FORK REBOUND	FRONT FORK COMPRESSION	REAR SHOCK REBOUND	REAR SHOCK COMPRESSION	RESULTS
	Max damping minus 0.5 turn	Max damping minus 1.25 turns	Max damping minus 1.5 turn	Max damping minus 2.25 turns	Factory recommended settings.

REMOVAL/DISASSEMBLY

1. See Figure 2-91. Slide rubber boot (5) off the cable adjusters (4). Loosen cable adjuster lock (3) on each adjuster.
2. See Figure 2-92. Remove two screws (1, 6) on front housing. Separate housings from handlebar.
3. Unhook ferrules (7) from cable wheel (8).
4. Remove cables from notches in housings (5, 9).
5. Remove air cleaner cover and backplate. See 4.42 AIR CLEANER.
6. Remove screw and throttle cable clamps from cables by throttle body.
7. Disconnect cables from throttle body manifold to remove.

CLEANING AND INSPECTION

Clean all parts in a non-flammable cleaning solvent. Blow dry with compressed air. Replace cables if frayed, kinked or bent.

ASSEMBLY/INSTALLATION

1. See Figure 2-92. Place cable assemblies (3, 4) into housings (5, 9). Throttle control cable (4) has a molded fitting end and is positioned inside the front housing (5). Idle control cable (3) has a smaller fitting end and is positioned inside the rear housing (9).
2. Run cables inside grooves of each housing (5, 9).
3. Attach ferrules (7) to cable wheel (8). When properly assembled, notches for ferrules will be at 12 o'clock.
4. Position housings on right handlebar by engaging locating pin (10) on front housing with hole in handlebar. Attach housings with two screws (1, 6), installing longer screw on bottom. Tighten screws to 12-17 **in-lbs** (1-2 Nm).

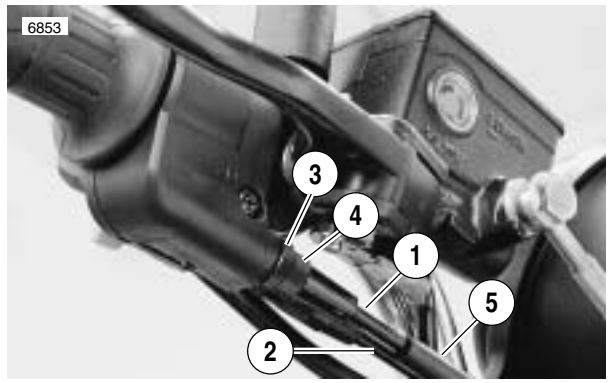

1. **Throttle Control Cable**
2. **Idle Control Cable**
3. **Cable Adjuster Lock**
4. **Cable Adjuster**
5. **Rubber Boot**

Figure 2-91. Throttle Control Cables

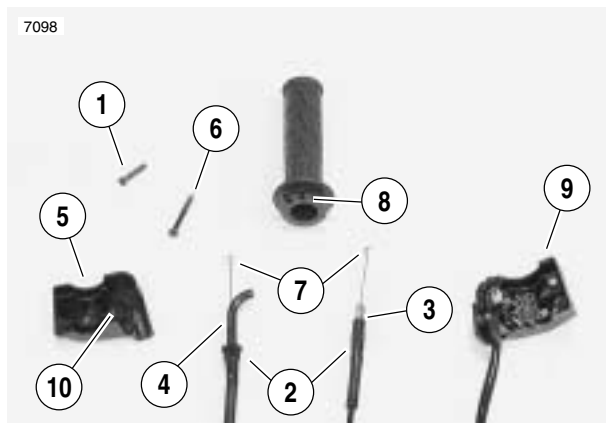

1. **Screw (short, top)**
2. **Cable Adjusters (2)**
3. **Idle Control Cable**
4. **Throttle Control Cable with Molded End**
5. **Front Housing**
6. **Screw (Long, Bottom)**
7. **Ferrules**
8. **Cable Wheel**
9. **Rear Housing**
10. **Locating Pin**

Figure 2-92. Cable Connections

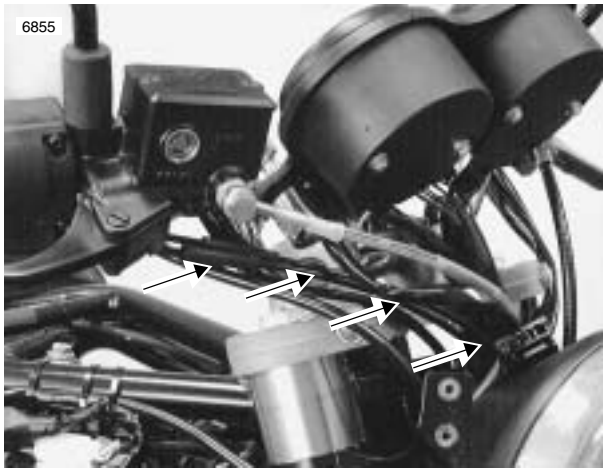

Figure 2-93. Throttle Cable/Handlebar Routing

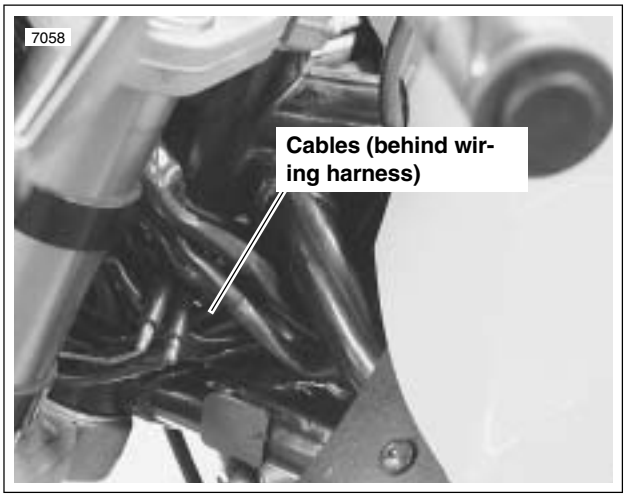

Figure 2-94. Steering Neck Routing

5. Route idle and throttle control cables.
   a. See Figure 2-93. Cables must be routed forward from throttle control grip, forward of upper triple clamp and to the left.
   b. See Figure 2-94. Continue between the left side of frame steering head and left frame tube. Cables should be above and to the left of the D-shaped washer behind the steering head.
   c. See Figure 2-95. Route cables below the fuel tank and continue downward.
6. Attach throttle cables to throttle body and adjust. See 1.20 THROTTLE CABLES.
   - See Figure 2-96. Attach throttle cable clamp to ferrules with screw (arrow on clamp points up).
7. Install air cleaner assembly. See 4.42 AIR CLEANER.

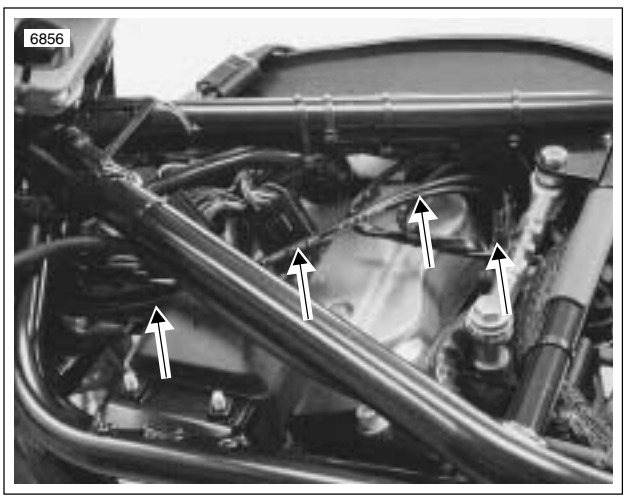

Figure 2-95. Throttle Body Routing

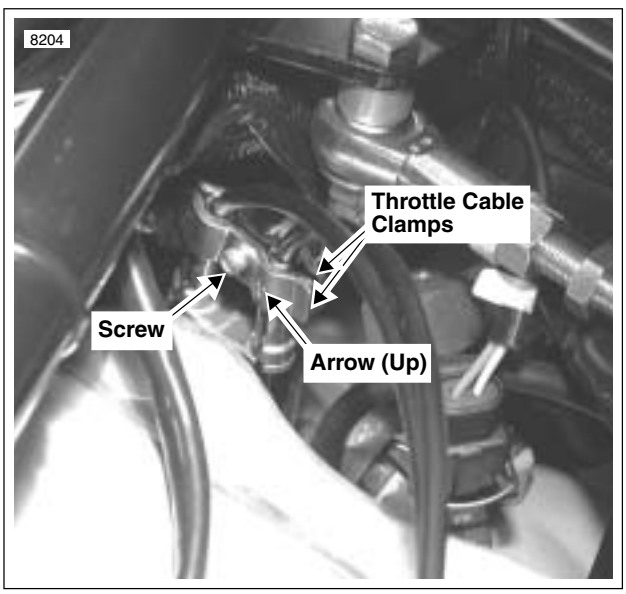

Figure 2-96. Throttle Cable Clamps

NOTE
For information on clutch adjustment, see 1.10 CLUTCH.

REMOVAL/DISASSEMBLY

Clutch Cable-Lower

1. Raise rear wheel off floor using REAR WHEEL SUPPORT STAND (Part No. B-41174).
2. See Figure 2-97. Remove four TORX screws (1) with washers and clutch inspection cover (2). Do not damage or dislodge quad ring (14) in primary cover (11).
3. Slide spring (3) with attached hex lockplate (4) from flats of adjusting screw (12).
4. Turn adjusting screw clockwise to release ramp and coupling mechanism. As the adjusting screw is turned, ramp assembly moves forward. Unscrew nut (5) from end of adjusting screw.
5. Remove hook of ramp (6) from button at the rear of cable end coupling (16). Remove cable end (10) from slot in coupling.
6. Turn cable end fitting (9) counterclockwise to remove clutch cable lower section from primary cover (11). Remove O-ring (8) from cable end fitting.

Clutch Hand Control

1. See Figure 2-98. Detach clutch switch (7).
   a. Remove screw (8).
   b. Depress clutch lever and hold.
   c. Detach switch by depressing switch trigger button and pulling switch towards the end of the handlebar.

NOTE
The individual parts of the clutch switch are not serviceable. Replace switch upon failure.

2. Remove bolt (2) (metric) and nut (6) (metric).
3. Remove handlever from clutch clamp (5). Detach clutch cable from handlever.
4. Remove clutch cable clamp (10) from frame.
5. Remove clutch clamp.
   a. Cut off left handgrip.
   b. Remove left handlebar switch housing. See 7.15 HANDLEBAR SWITCHES.
   c. Remove clamp screw (4) (metric). Slide clamp off the end of the handlebar.

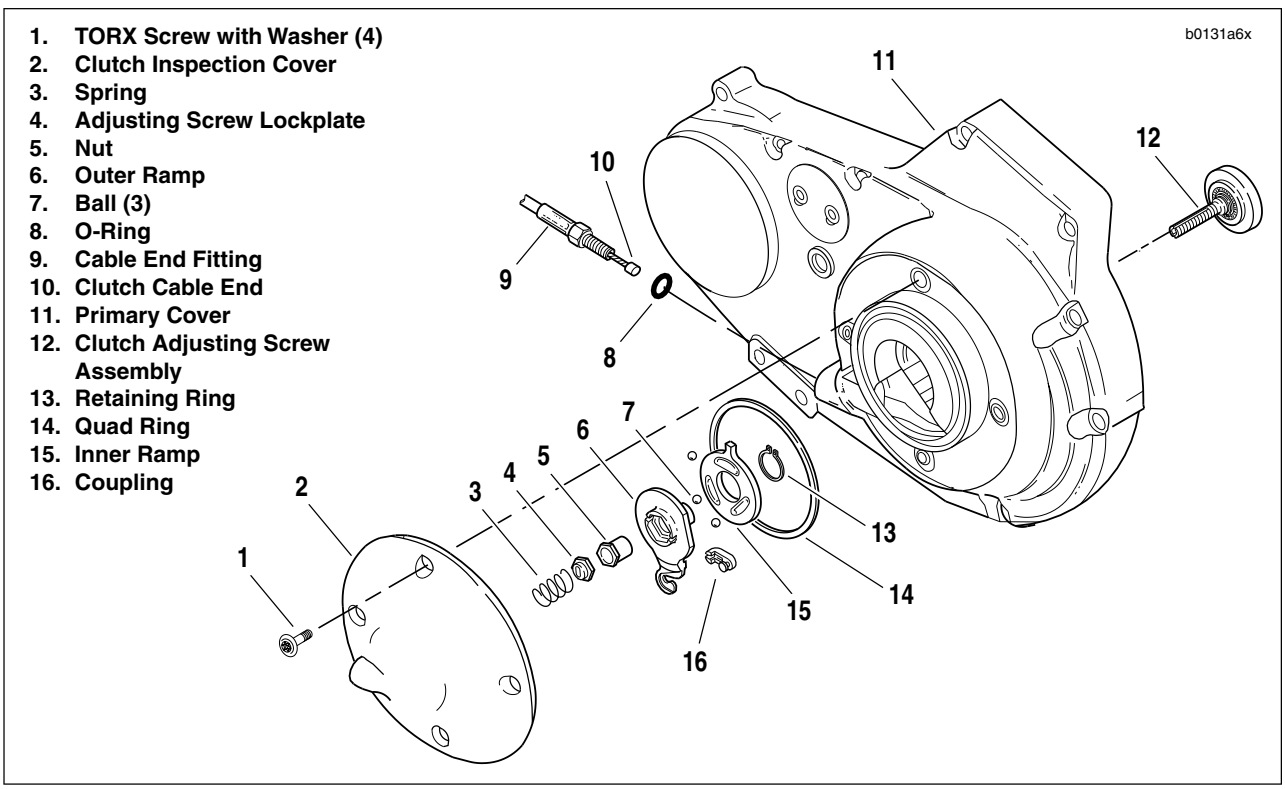

Figure 2-97. Clutch Release Mechanism

ASSEMBLY/INSTALLATION

Clutch Cable-Lower

1. See Figure 2-97. Install O-ring (8) over cable end fitting (9) of clutch cable lower section. Turn fitting clockwise to install into primary cover (11). Tighten fitting to 3-9 ft-lbs (4-12 Nm).
2. Fit coupling (16) over cable end. Place hook of ramp around coupling button and rotate assembly counter-clockwise until tang on inner ramp (15) fits in slot of primary cover (11).
3. Thread nut (5) on adjusting screw (12) until slot of screw is accessible with a screwdriver. Fit nut hex into recess of outer ramp (6) and turn adjusting screw counter-clockwise.
4. If not yet performed, route clutch cable to hand control.
   a. See Figure 2-99. Route cable along left side of primary chaincase and up to clamp on front isolator tie bar. Cable must not touch chin fairing.
   b. Clamp should be on bottom left of bolt. Brass fitting on cable should be approximately 3.0 in. (76 mm) above clamp.
   c. Continue above and behind lower triple clamp, between right side of the steering head and left of front brake line.
   d. Route cable across front of upper triple clamp to hand grip.
5. With clutch cable upper section connected to clutch lever, check primary chain tension. Adjust if necessary. See 1.13 PRIMARY CHAIN.
6. Adjust clutch. See 1.10 CLUTCH.

Clutch Hand Control

1. See Figure 2-98. Attach clutch clamp (5) as follows.
   a. Slide clamp over handlebar.
   b. Install left switchgear housing. See 7.15 HANDLEBAR SWITCHES.
   c. Place clamp next to switchgear housing. Fasten to handlebar with screw (4) (metric). Tighten to 30-35 **in-lbs** (3-4 Nm).
   d. Install a **new** left handgrip. See 2.27 HANDLEBARS.
2. Connect end of clutch cable upper section to clutch handlever. Position lever within clutch clamp.
3. Apply small amount of LOCTITE ANTI-SEIZE LUBRICANT to bolt (2). Attach handlever with bolt (2) (metric) and nut (6) (metric).
4. Attach clutch switch (7) with screw (8).
5. If not yet performed, route clutch cable to primary cover.
   a. Route cable from hand grip across front of upper triple clamp.
   b. Continue to right side, down between right fork leg and steering neck. Route cable between right side of the steering head and left of front brake line.

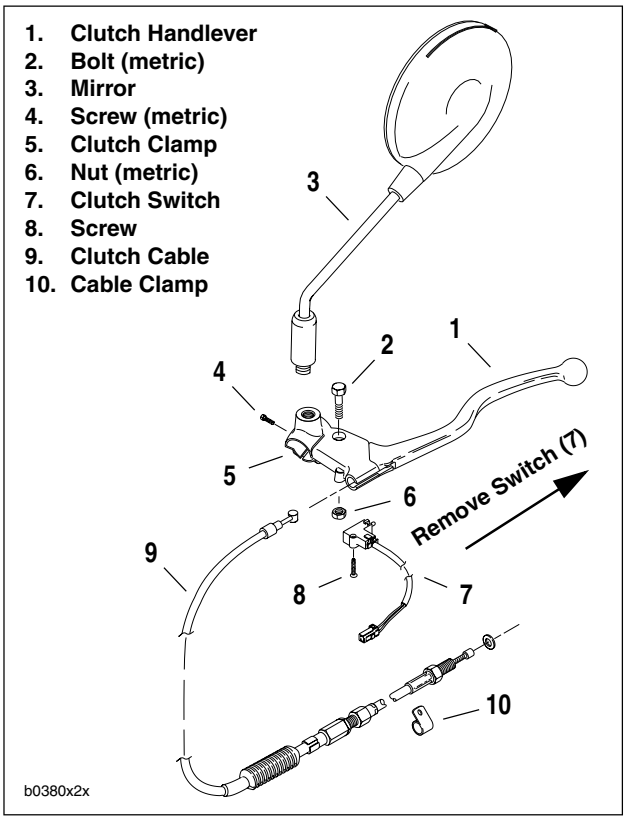

Figure 2-98. Clutch Hand Control

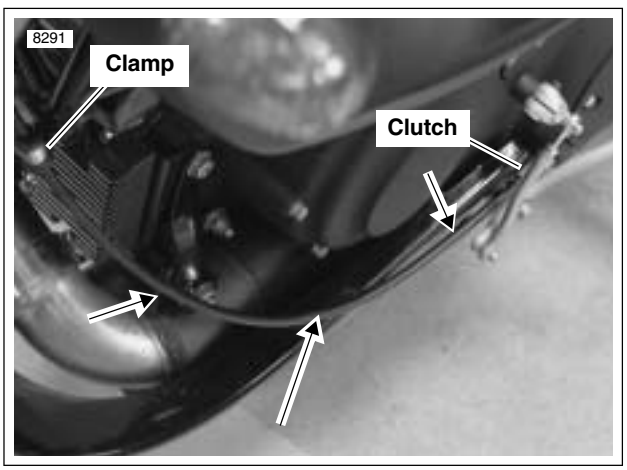

Figure 2-99. Clutch Cable Routing, Lower

   c. Continue through clamp on front isolator. Clamp should be on bottom left of bolt. Brass fitting on cable should be approximately 3.0 in. (76 mm) above clamp.
   d. See Figure 2-99. Route cable down left side of bike, through clamp, along primary chaincase to clutch. Cable must not touch chin fairing.
6. With clutch cable lower section connected to primary cover, adjust clutch. See 1.10 CLUTCH.

INSTRUMENT SUPPORT 2.26

REMOVAL

1. Remove four screws and washers to detach windscreen.
2. See Figure 2-100. Remove speedometer (1) and tachometer (4). See 7.17 SPEEDOMETER and 7.18 TACHOMETER.
3. Remove face nut (3) from ignition key switch. See 7.3 IGNITION/HEADLAMP KEY SWITCH.
4. Remove indicator lights (5) from instrument support (2).
   a. Loosen all four catches on indicator light housing.
   b. Remove indicator light housing from behind instrument support.
   c. Pull indicator light bezel and graphics panel through front of instrument support.
5. Pull plastic cap from odometer reset button. Remove button from behind dash.
6. Remove two screws (6) to detach instrument support from handlebar clamp.

INSTALLATION

1. See Figure 2-100. Attach instrument support to handlebar clamp.
   a. Apply LOCTITE THREADLOCKER 243 (blue) to both screws (6).
   b. Align instrument support on handlebar clamp. Install two screws.
   c. Tighten screws to 4-5 ft-lbs (5-7 Nm).
2. Install odometer reset button.
3. Install ignition key switch face nut (3). See 7.3 IGNITION/HEADLAMP KEY SWITCH.
4. Install indicator lights (5).
   a. Place graphics panel inside indicator light bezel. Install parts through front of dash.
   b. See Figure 2-101. Align wire colors on indicator light housing with correct symbols on graphics panel.
   c. Insert indicator light housing into bezel. Secure with four catches.
5. See Figure 2-100. Install both instruments. See 7.17 SPEEDOMETER and 7.18 TACHOMETER.
6. Attach windscreen using four screws and washers.

1. **Speedometer**
2. **Instrument Support**
3. **Key Switch Face Nut**
4. **Tachometer**
5. **Indicator Lights**
6. **Screws (2)**
7. **Trip odometer Reset Button**

Figure 2-100. Instrument Support

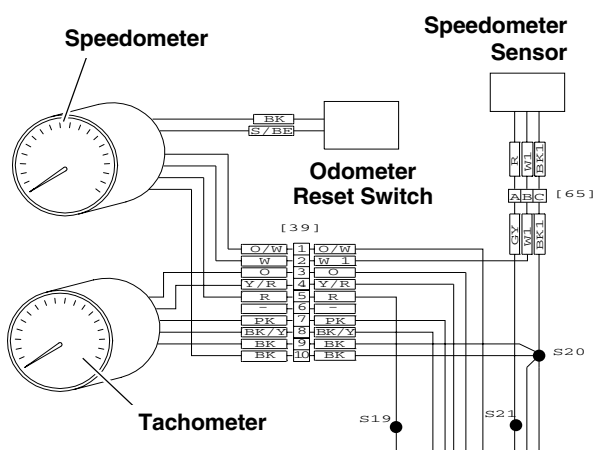

Figure 2-101. Instrument Support Wiring

REMOVAL

1. Remove left handlebar switch housing. See 7.15 HANDLEBAR SWITCHES. Cut left handlebar grip and remove.
2. Detach clutch hand control from handlebars. See 2.25 CLUTCH CONTROL.
3. Remove front brake master cylinder. See 2.10 FRONT BRAKE MASTER CYLINDER.
4. Loosen screws on right handlebar switch housing, but do not detach throttle grip assembly from handlebar. See 2.24 THROTTLE CONTROL.
5. Remove four screws and washers to detach windscreen.
6. See Figure 2-102. Remove four screws (1, 2) from instrument support (3).
7. Lift instruments and remove handlebars without stretching throttle cables.
8. Remove throttle grip assembly.

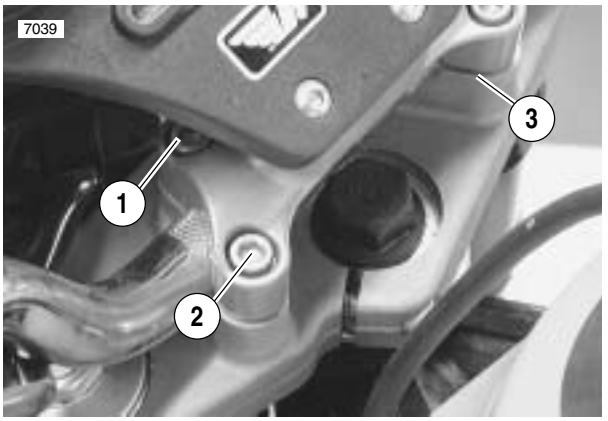

1. **Front Clamp Screws (2)**
2. **Rear Clamp Screws (2)**
3. **Instrument Support**

Figure 2-102. Instrument Support Screws

INSTALLATION

1. Slide handlebars into throttle grip assembly. Fasten right handlebar switch housing to handlebar. See 2.24 THROTTLE CONTROL.
2. Attach handlebars.
   a. See Figure 2-102. Lift instruments and place handlebars under instrument support. Loosely install four screws (1, 2).
   b. Tighten both front screws (1) to 10-12 ft-lbs (14-16 Nm).
   c. Then tighten both rear screws (2) 10-12 ft-lbs (14-16 Nm).
3. Install clutch hand control. See 2.25 CLUTCH CONTROL.
4. Install left switch housing. See 7.15 HANDLEBAR SWITCHES.
5. Check control wire routings.
   a. See Figure 2-103. Route right hand control wires (1) in front of handlebar and triple clamp (4).
   b. Route left hand control wires (2) in front of handlebar and triple clamp (4).
6. Install a **new** left handgrip.
   a. Clean end of handlebar with M600.
   b. Place LOCTITE 411 ADHESIVE around inside of grip.
   c. Push grip onto handlebar end. Twist grip on bar until end touches left switchgear housing.
   d. Wipe off excess adhesive with a rag.
7. Install front brake master cylinder. See 2.10 FRONT BRAKE MASTER CYLINDER.
8. Attach windscreen using four screws and washers.
9. Check steering motion range to both fork stops. See 1.22 HANDLEBARS.

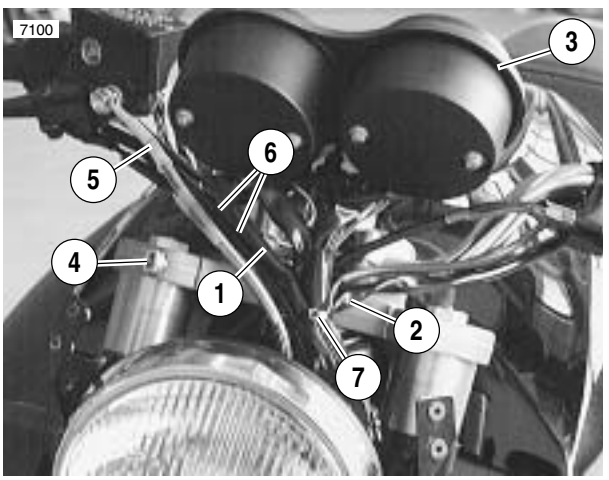

1. **Right Hand Control Cables**
2. **Left Hand Control Cables**
3. **Instrument Support on Upper Triple Clamp**
4. **Triple Clamp**
5. **Front Brake Line**
6. **Throttle Cables**
7. **Cable Strap**

Figure 2-103. Routing Hand Control Wires

REMOVAL/DISASSEMBLY

Muffler

NOTE

The muffler may be removed for replacement without removing the exhaust header.

1. Remove chin fairing. See 2.34 CHIN FAIRING.
2. See Figure 2-104. Remove two bolts, washers and locknuts securing rear of muffler to Z-bracket.
3. See Figure 2-105. Remove lower bolt (Gr. 8), metal locknut, washers and spacer from header support mount at the front of the muffler.
4. Loosen screw securing muffler clamp.
5. Remove muffler and muffler clamp. Discard clamp.
6. If necessary, remove muffler support Z-bracket from mount block.
   a. Remove bolts, locknuts and washers.
   b. Remove muffler support Z-bracket.
   c. Remove rear muffler mounts and mount spacers from swingarm mount block.
7. If necessary, remove header support mount.
   a. See Figure 2-106. Support motorcycle with jack.
   b. Remove bolts, locknuts and washers.
   c. Remove nuts and washers securing front muffler support to voltage regulator bracket and crankcase.
   d. Remove muffler support. Remove front muffler mounts and mount spacer.

Exhaust Header

1. Remove muffler.
2. Remove any restrictive cable straps on oxygen sensor wiring. Detach oxygen sensor connector [137].
3. See Figure 2-107. Loosen the four exhaust header nuts (20) using SNAP-ON SWIVEL SOCKET (Part No. PFSX916).
4. See Figure 2-108. Remove exhaust header by swiveling and lifting exhaust header as shown. Slide exhaust header from behind frame.
5. See Figure 2-107. Remove exhaust header clamps (22), exhaust clamp retaining rings (23) and exhaust port gaskets (24) from exhaust header.

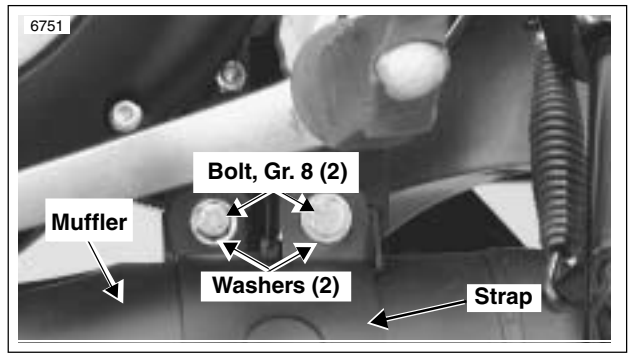

Figure 2-104. Rear Muffler Mounts

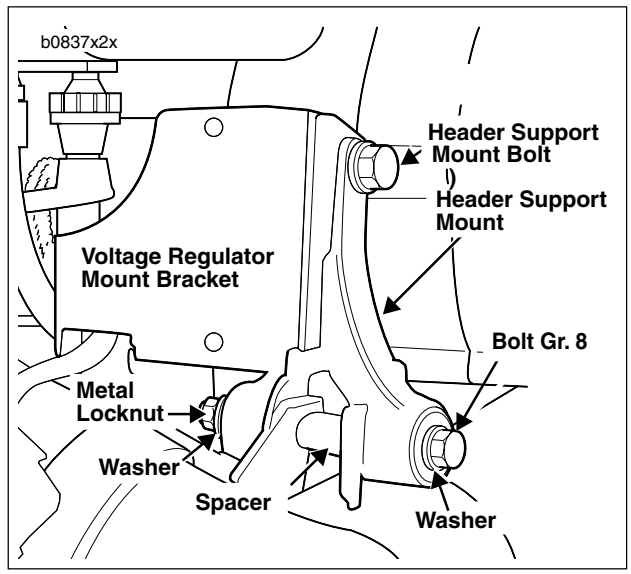

Figure 2-105. Header Support Mount

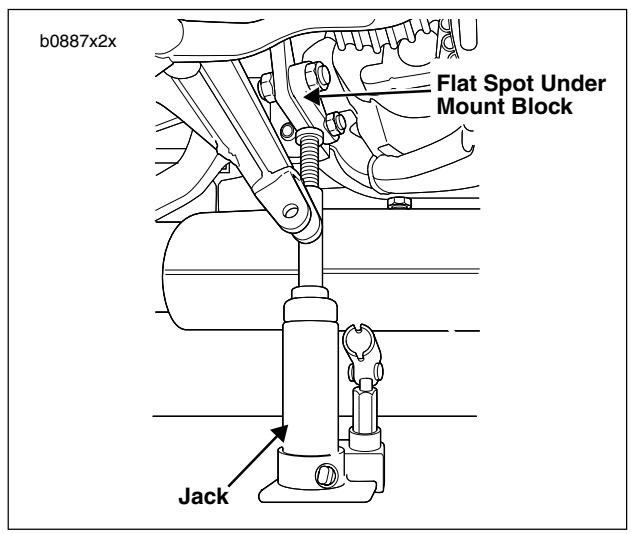

Figure 2-106. Supporting Motorcycle with Jack

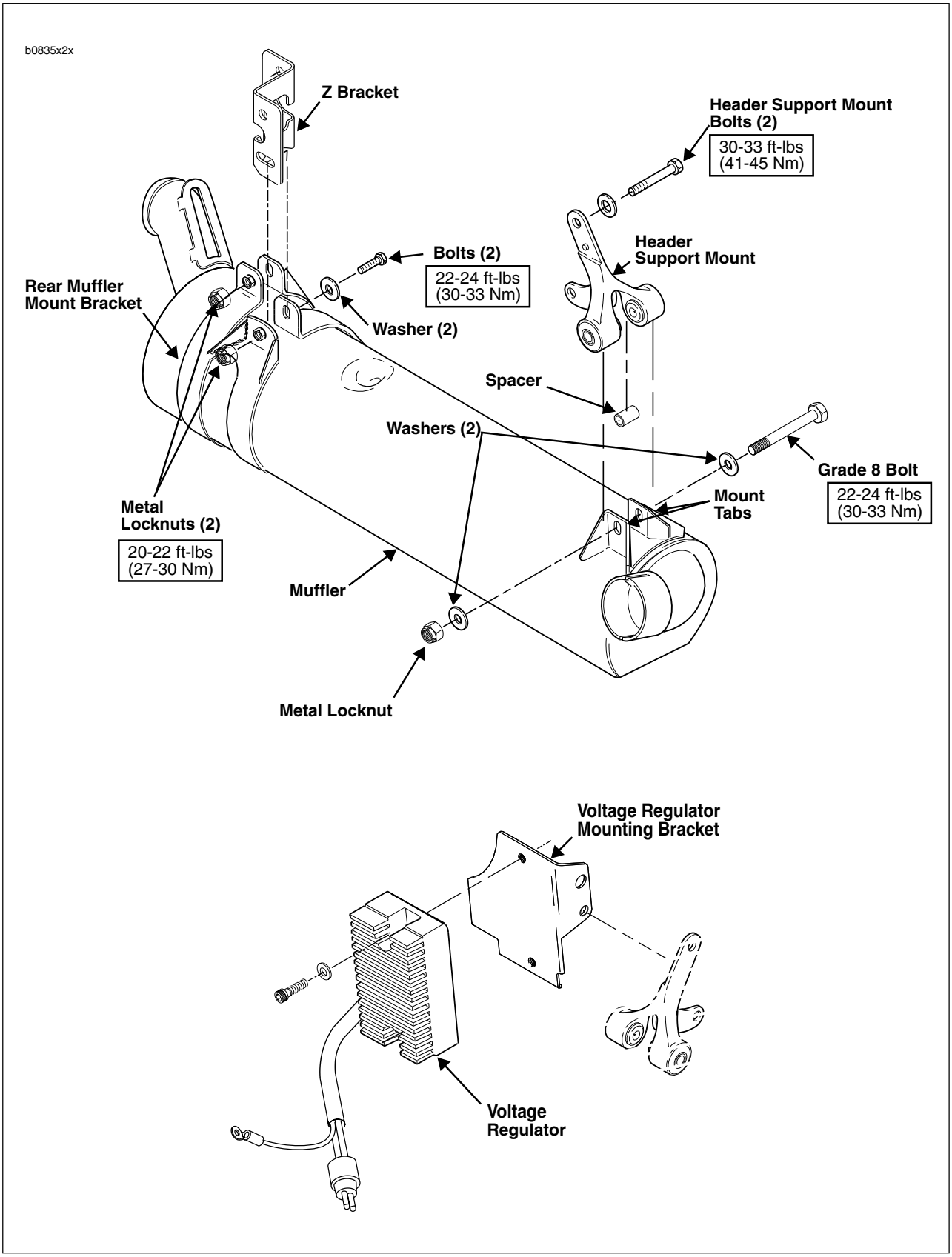

Figure 2-107. Exhaust System

ASSEMBLY/INSTALLATION

Muffler

1. If removed, install exhaust header.
2. See Figure 2-107. If removed, install Z-bracket.
   a. Install rear muffler mounts and mount spacers on swingarm mount block.
   b. Attach Z-bracket with bolts, locknuts and washers. Bolt heads install on opposite side of the swingarm mount block from Z-bracket. Tighten bolts to 22-24 ft-lbs (30-33 Nm).
3. See Figure 2-105. If removed, attach front muffler support to crankcase.
   a. Insert two front muffler mounts and mount spacer into muffler support.
   b. Install nuts and washers securing front muffler support to voltage regulator bracket and crankcase.
   c. Attach header support mount to crankcase with two upper bolts, washers and locknuts. Tighten bolts to 30-33 ft-lbs (41-45 Nm).
   d. Lower and remove jack from under motorcycle.
4. Coat inside of muffler inlet with PERMATEX ULTRA-COPPER HIGH TEMP RTV SILICON GASKET material.

NOTE

If necessary, use a fiber hammer to fit muffler on header.

5. Place a **new** muffler clamp over slotted end of muffler. Place muffler and clamp on end of exhaust header. Snug clamp but do not tighten.

⚠WARNING

Before tightening muffler hardware, position muffler to provide adequate clearance from rear shock absorber, side stand spring post and rear tire. Failure to provide adequate clearance during motorcycle operation could result in death or serious injury.

6. See Figure 2-104. Position muffler and install to rear mounting support and weldnuts in rear muffler straps with two sets of bolts, washers and locknuts. Tighten bolts to 22-24 ft-lbs (30-33 Nm).
7. See Figure 2-105. Secure muffler to header support mount with bolt, locknut and washers. Tighten to 22-24 ft-lbs (30-33 Nm).
8. If only the muffler is being replaced, tighten muffler clamp hardware to 40-45 ft-lbs (54-61 Nm) at this time. If also installing the exhaust header, leave muffler clamp loose.

Exhaust Header

NOTE

Tighten muffler hardware before exhaust header hardware.

1. See Figure 2-109. Install **new** exhaust port gaskets and exhaust clamp retaining rings.
2. Slide exhaust header clamps over ends of exhaust header.
3. See Figure 2-108. Slide exhaust header under frame by positioning as shown, threading oxygen sensor wire under frame.

Figure 2-108. Exhaust Header Positioning

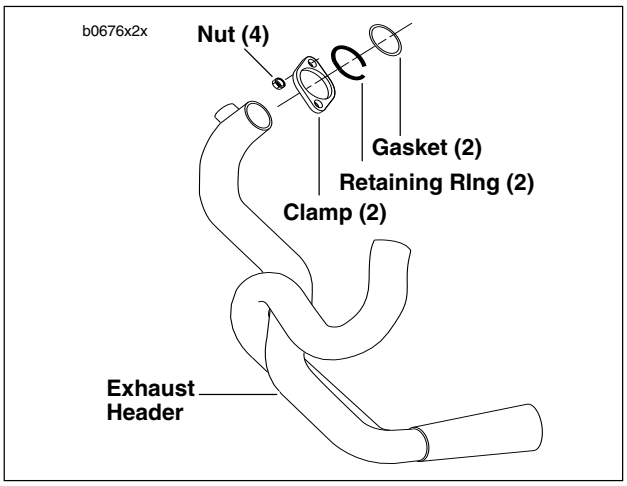

Figure 2-109. Exhaust Header

Figure 2-110. Exhaust Header Alignment

4. See Figure 2-110. Position rear end of exhaust header in port as shown. Do not install exhaust header clamp over port.
5. Rotate exhaust header so that front end of exhaust header is in position at front port to cylinder head.
6. See Figure 2-109. Fasten exhaust header to cylinder heads with exhaust header clamps and nuts. Tighten nuts to 6-8 ft-lbs (8-11 Nm) using SNAP-ON SWIVEL SOCKET (Part No. PFSX916).
7. Install oxygen sensor to header if removed. Apply LOCTITE ANTI-SEIZE LUBRICANT to threads of sensor and install to exhaust header. Tighten sensor to 42-45 ft-lbs (57-61 Nm). Attach oxygen sensor connector [137]. Secure wiring and sensor with **new** cable ties.
8. Tighten muffler clamp hardware to 40-45 ft-lbs (54-61 Nm).
9. Install chin fairing. See 2.34 CHIN FAIRING.

FOOTRESTS 2.29

REMOVAL

1. See Figure 2-111. To remove rider footrest.
   a. Remove retaining ring (1) and washer (2) from pin (3).
   b. Hold hand over spring (4) and remove pin, spring and footpeg (5) from mount (6).
2. If necessary, detach passenger footrest (7) by removing bolt (8) and nut (9) from frame mount.

INSTALLATION

1. If removed, install passenger footrest.
   a. See Figure 2-111. Apply LOCTITE THREAD-LOCKER 243 (blue) to footrest bolt (8).
   b. Secure footrest to frame mount with bolt (8) and nut (9). Tighten to 10-15 ft-lbs (14-20 Nm).
2. Install rider footrest.

NOTE

If footrest mount (6) was removed, apply LOCTITE THREAD-LOCKER 271 (red) to bolt, install and tighten bolt to 23-25 ft-lbs (31-34 Nm).

   a. Position spring (4) on mount (6) with thick side of spring inboard.
   b. Install pin (3) through spring (4), mount (6) and footrest (5).
   c. Install washer (2) and retaining ring (1) to pin (3). Make sure retaining ring engages groove in pin.

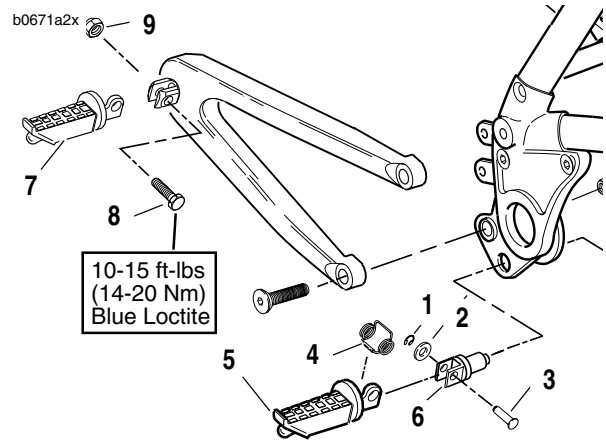

1. **Retaining Ring**
2. **Washer**
3. **Pin**
4. **Spring**
5. **Rider Footrest**
6. **Mount**
7. **Passenger Footrest**
8. **Bolt**
9. **Nut**

Figure 2-111. Footrests

SPROCKET COVER 2.30

REMOVAL/DISASSEMBLY

1. See Figure 2-112. Remove two bolts (1), washers (2) and rubber washers (3) from right side of chin fairing (4).
2. See Figure 2-113. Remove nut and washer.
3. Remove sprocket cover screw, washer and spacer.
4. Remove swingarm drive/support and sprocket cover as an assembly.
5. Remove two screws to separate sprocket cover from swingarm/drive support. Do not remove rivet holding rubber bumper.

ASSEMBLY/INSTALLATION

1. See Figure 2-113. If removed, attach sprocket cover to swingarm/drive support.
   a. Place sprocket cover behind swingarm/drive support. Align holes in cover with holes in support.
   b. Apply LOCTITE THREADLOCKER 222 (purple) to both screws.
   c. Install screws to rear of sprocket cover. Tighten screws to 12-17 **in-lbs** (1-2 Nm).
2. Apply LOCTITE THREADLOCKER 243 (blue) to screw. Install sprocket cover assembly with screw, washer and spacer. Tighten screw to 48-72 **in-lbs** (5-9 Nm).
3. See Figure 2-112. Apply LOCTITE THREADLOCKER 243 (blue) to bolts (1). Place metal washers (2) over bolts (1) and then install rubber washer (3). Install bolts (1) and tighten to 9-10 ft-lbs (12-14 Nm).
4. Install nut and washer to swingarm/drive support. Tighten nut to 30-35 ft-lbs (41-47 Nm).

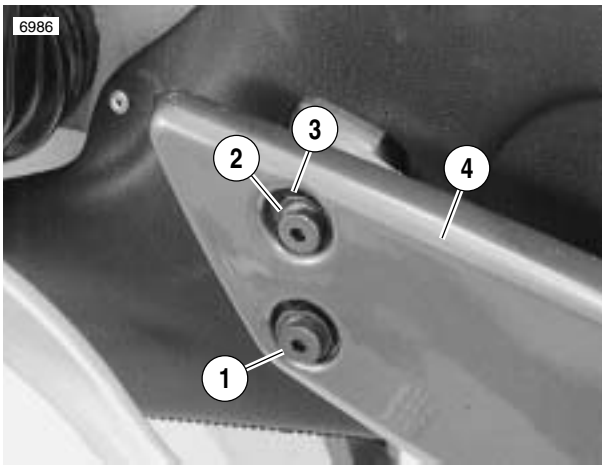

1. **Bolts**
2. **Washer**
3. **Rubber Washer**
4. **Chin Fairing**

Figure 2-112. Chin Fairing, Right Side

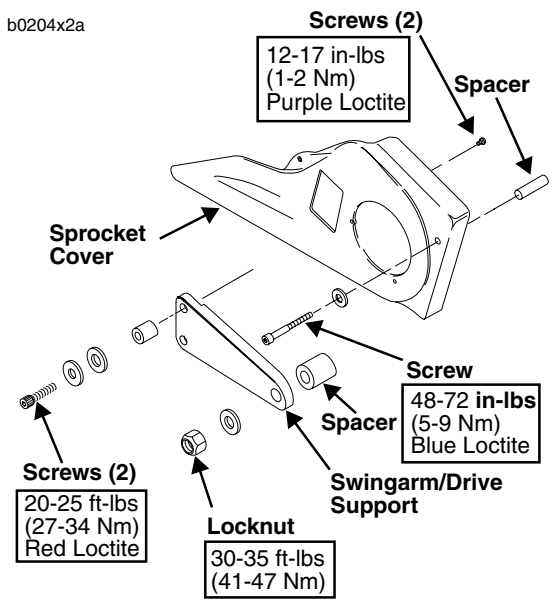

Figure 2-113. Sprocket Cover

FRONT FENDER 2.31

REMOVAL/INSTALLATION

1. Raise front wheel off floor using procedure under 1.17 STEERING HEAD BEARINGS.
2. Remove front wheel. See 2.5 FRONT WHEEL.
3. See Figure 2-114. Remove lower fender mounting screws (8) (metric), washers (9) and plastic spacers (6).
4. Remove upper fender mounting screws (3), washers (4), wire guides (5), plastic spacers (6) and locknuts (7).
5. Carefully remove fender (1) from between front forks.
6. Install in reverse order.
   a. Tighten upper fender mounting screws (3) to 20-25 **in-lbs** (2-3 Nm).
   b. Tighten lower fender mounting screws (8) (metric) to 10-15 **in-lbs** (1-2 Nm).

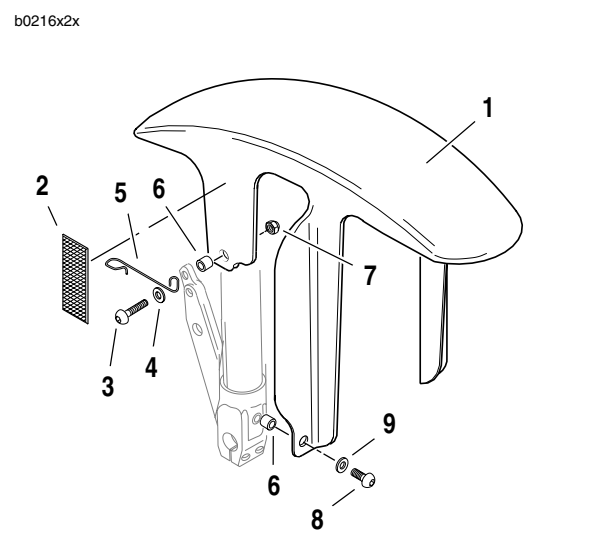

1. **Front Fender**
2. **Reflector (2) (U.S. Models)**
3. **Screw (2)**
4. **Washer (2)**
5. **Wire Guide (2)**
6. **Plastic Spacer (4)**
7. **Locknut (2)**
8. **Screw (2) (metric)**
9. **Nylon Washer (2)**

Figure 2-114. Front Fender

REMOVAL

1. See Figure 2-115. Loosen two bolts (1) securing footrest mounts (2) on both sides.
2. See Figure 2-116. Remove two screws (1) and washers (2) from right side wellnuts (4).
3. Remove screw (5) and washer (6) from front wellnut (7).
4. Remove screw (8) washer (9) and clamp from left side.
5. Pull fender (3) over rear tire.

INSTALLATION

1. See Figure 2-115. Position fender (3) over tire, making sure that the brake line (4) is on the inside of the fender as shown.
2. Have someone sit on the vehicle to compress the motorcycle's suspension.
3. See Figure 2-116. Install hardware in reverse order. Apply LOCTITE THREADLOCKER 243 (blue) to all screws.
4. Attach footrest mounts on both sides. Tighten bolts to 13-16 ft-lbs (18-22 Nm).

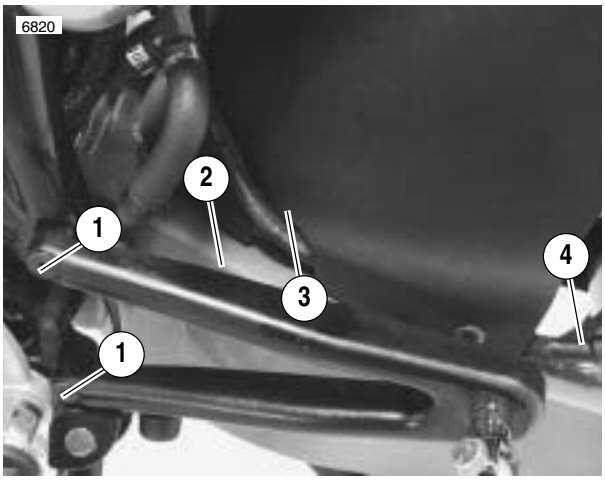

1. **Bolts (2)**
2. **Passenger Footrest Mount**
3. **Fender**
4. **Brake Line**

Figure 2-115. Rear Fender With Brake Line (Left Side)

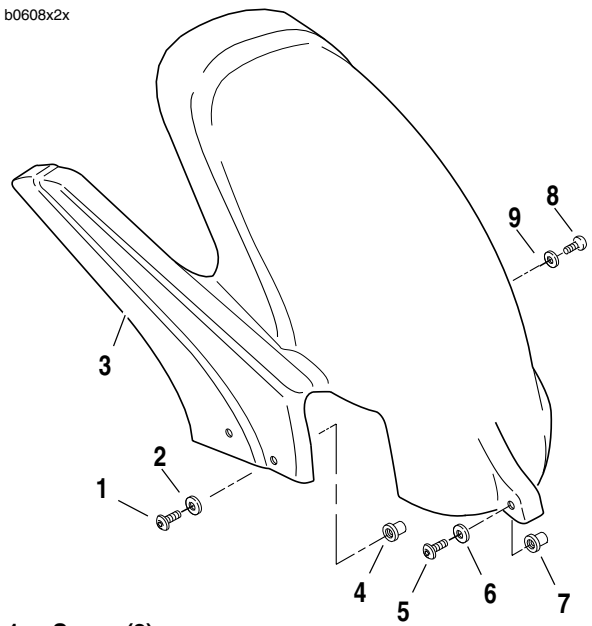

1. **Screw (2)**
2. **Washer (2)**
3. **Fender**
4. **Wellnut (2)**
5. **Screw**
6. **Washer**
7. **Wellnut**
8. **Screw**
9. **Washer**

Figure 2-116. Rear Fender

REMOVAL

1. See Figure 2-117. Remove two screws (1) and washers (2) securing lower belt guard (3) to swingarm.
2. Remove lower belt guard (3), stone guard (4) and wellnuts (5).

INSTALLATION

1. See Figure 2-118. Position stone guard (4) with wellnuts (5) and lower belt guard (3) on swingarm.
2. Secure with two screws (1) and washers (2).

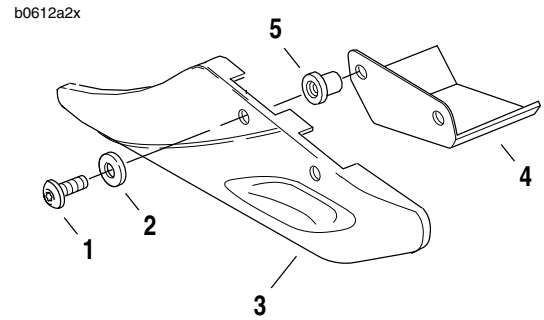

1. Screw (2)
2. Washer (2)
3. Lower Belt Guard
4. Stone Guard
5. Wellnut (2)

Figure 2-117. Belt Guard and Stone Guard Installation

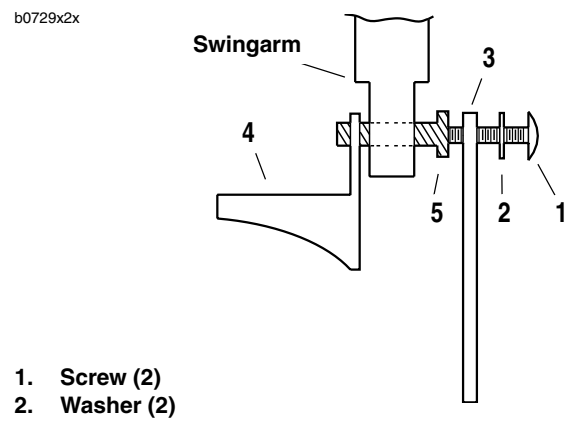

1. Screw (2)
2. Washer (2)
3. Lower Belt Guard
4. Stone Guard
5. Wellnut (2)

Figure 2-118. Stone Guard and Belt Guard Mounting

CHIN FAIRING 2.34

REMOVAL

1. See Figure 2-119. Remove two bolts and washers (1) from left side of chin fairing (2) near clutch cable (3).
2. See Figure 2-120. Remove bolt, washer and wellnut (1) securing chin fairing (2) to chin fairing bracket (3).
3. See Figure 2-121. Remove two bolts, washers and rubber washers from right side of chin fairing.
4. Lower chin fairing from motorcycle.
5. Rear shock mount supports chin fairing bracket. If necessary, remove bolt following procedure under 2.21 REAR SHOCK ABSORBER.

INSTALLATION

1. See Figure 2-120. If removed, install chin fairing bracket (3) on shock mounting hardware. See 2.21 REAR SHOCK ABSORBER.
2. See Figure 2-121. Install right side mounting hardware.
   a. Install washer (2) and rubber washer (3) on bolt.
   b. Place LOCTITE THREADLOCKER 243 (blue) on the last few threads of bolts.
   c. Loosely install both bolts.
3. See Figure 2-120. Loosely install bolt, washer and wellnut (1) to attach chin fairing (2) to chin fairing bracket.
4. See Figure 2-119. On left side of chin fairing (2), loosely install bolt and washer (1). Loosely install shift lever bolt and washer (4).
5. Secure chin fairing hardware.
   a. Tighten chin fairing bracket bolt.
   b. Tighten left and right side chin fairing bolts to 9-10 ft-lbs (12-14 Nm).
   c. Tighten shift lever bolt to 27-29 ft-lbs (37-39 Nm).
6. Check for clutch cable contact. If contact occurs, adjust clutch cable clamp.

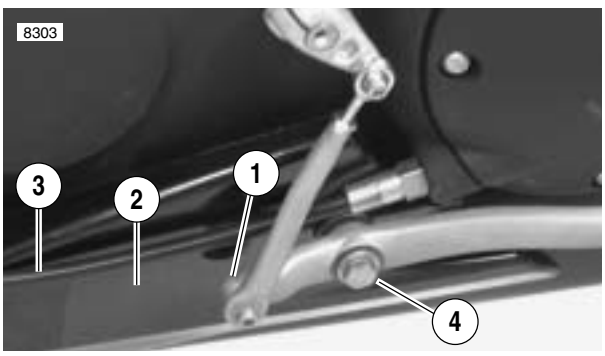

1. **Bolt and Washer**
2. **Chin Fairing**
3. **Clutch Cable**
4. **Shift Lever Bolt, and Washer**

Figure 2-119. Chin Fairing, Left Side

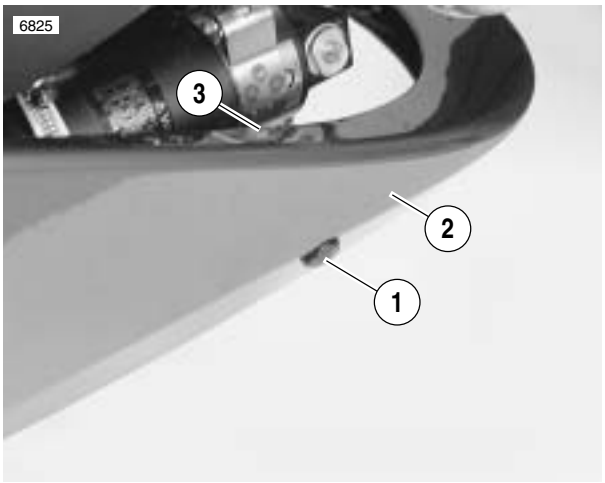

1. **Bolt, Washer and Wellnut**
2. **Chin Fairing**
3. **Chin Fairing Bracket (behind Chin Fairing)**

Figure 2-120. Chin Fairing Bracket

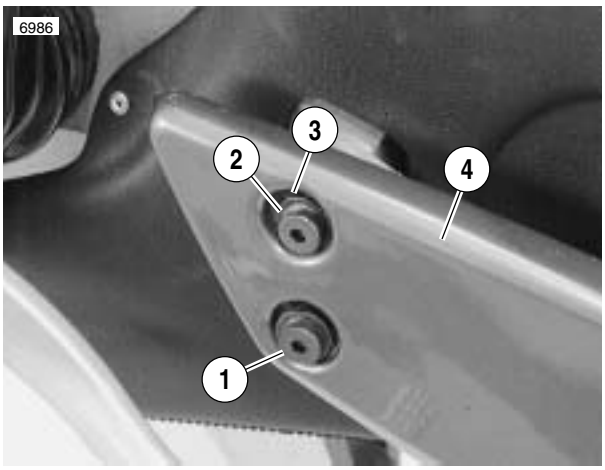

1. **Bolt**
2. **Washer**
3. **Rubber Washer**
4. **Chin Fairing**

Figure 2-121. Chin Fairing, Right Side

FUEL TANK COVER 2.35

REMOVAL

1. Remove seat. See 2.40 SEAT.
2. See Figure 2-122. Remove two fuel tank cover screws (1) and washers (2) from bracket (3). Remove bracket.
3. Cut cable strap from vapor vent hose and vent hose fitting on top of fuel tank. Detach vent hose.
4. See Figure 2-123. Remove two screws (1), washers (2) and wellnuts (4) at front of tank cover.
5. Remove fuel tank cover from frame.

INSTALLATION

1. Position fuel tank cover on frame.
2. See Figure 2-123. Secure front of fuel tank cover (3) with screws (1) and washers (2) through wellnuts (4).
3. Attach vent hose to vent hose fitting with a **new** cable strap.
4. See Figure 2-122. Install bracket.
   a. Position bracket (3) over fuel tank cover (4). Tab on bracket must face towards rear wheel.
   b. Install two screws (1) and washers (2). Tighten screws to 9-11 ft-lbs (12-15 Nm).

⚠WARNING

After installing seat, pull upward on front of seat to be sure it is locked in position. If seat is loose, it could shift during vehicle operation and startle the rider, causing loss of control which could result in death or serious injury.

5. Install seat. See 2.40 SEAT.

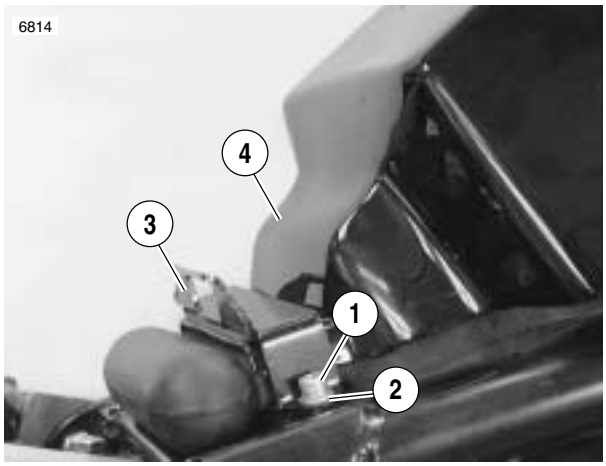

1. **Screw (2)**
2. **Washer (2)**
3. **Bracket**
4. **Fuel Tank Cover**

Figure 2-122. Fuel Tank Cover Bracket

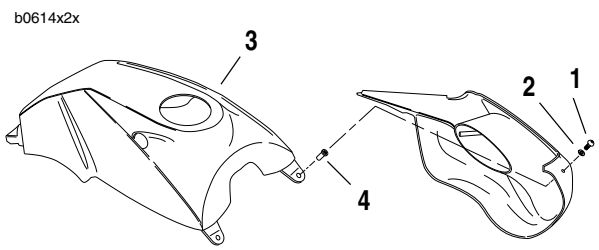

1. **Screw (2)**
2. **Washer (2)**
3. **Fuel Tank Cover**
4. **Wellnut (2)**

Figure 2-123. Fuel Tank Cover

AIR SCOOP 2.36

REMOVAL

1. See Figure 2-124. Remove screw and washer (1) from wellnut (3) at front of air scoop (2).
2. Remove screw and washer (5) from wellnut at bottom of air scoop.
3. See Figure 2-125. Remove screw, washer and nut holding air scoop (1) to clamp (3).
4. Remove air scoop.

INSTALLATION

1. See Figure 2-124. Position air scoop (2) over fuel tank cover (4).
2. Fasten air scoop (2) to fuel tank cover (4) using screw and washer (1) and wellnut (3) at front of scoop.
3. Install screw and washer into wellnut at bottom of scoop.
4. See Figure 2-125. Install screw, washer, and nut to attach air scoop (1) to clamp (3).

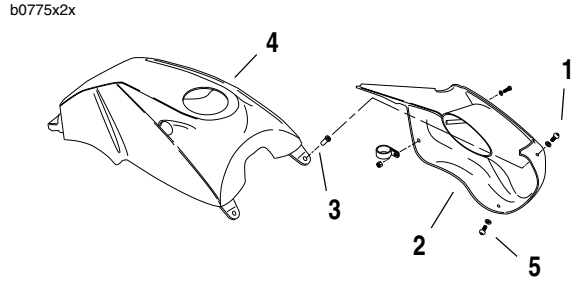

1. Screw and Washer
2. Air Scoop
3. Wellnut (2)
4. Fuel Tank Cover
5. Screw and Washer

Figure 2-124. Air Scoop

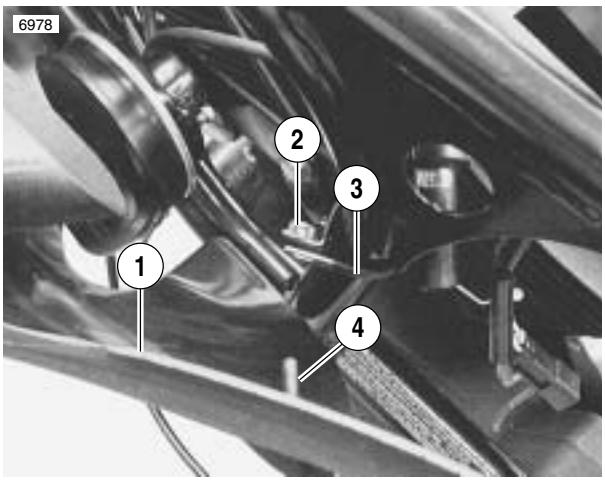

1. Air Scoop
2. Nut
3. Clamp
4. Screw and Washer

Figure 2-125. Air Scoop Clamp

REMOVAL

1. See Figure 2-128. Detach data link connector [91A] from trunk.
2. See Figure 2-126. Remove two screws and washers (1) and nuts and washers (2) securing front of trunk (4) to tail section (5).
3. Remove two screws and washers (3) securing trunk (4) to tail section (5) under edge of tail section.
4. See Figure 2-127. Remove screws and washers (1) from indentation in license plate bracket (2).
5. Push down on center of trunk until trunk pops free of tail section.

INSTALLATION

1. See Figure 2-126. Position trunk (4) in tail section (5).
2. Secure front of trunk (4) to tail section (5) with two screws and washers (1) and washers and nuts (2).
3. Secure trunk (4) to tail section (5) with two screws and washers (3) under edge of tail section.
4. See Figure 2-127. Secure trunk to license plate bracket (2) with screws and washers (1).
5. See Figure 2-128. Attach data link connector [91A] to trunk.

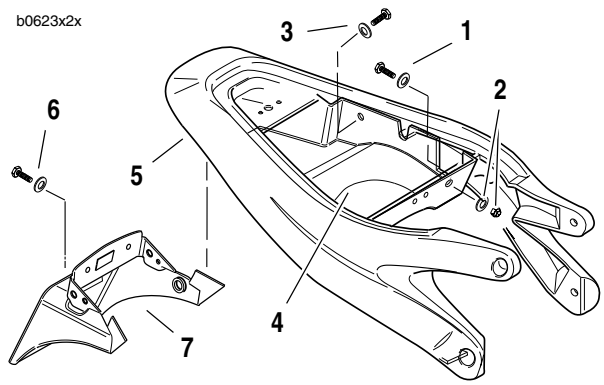

1. Screw and Washer (2)
2. Washer and Nut (2)
3. Screw and Washer (2)
4. Trunk
5. Tail Section
6. Screw and Washer (2)
7. License Plate Bracket

Figure 2-126. Tail Section with Trunk

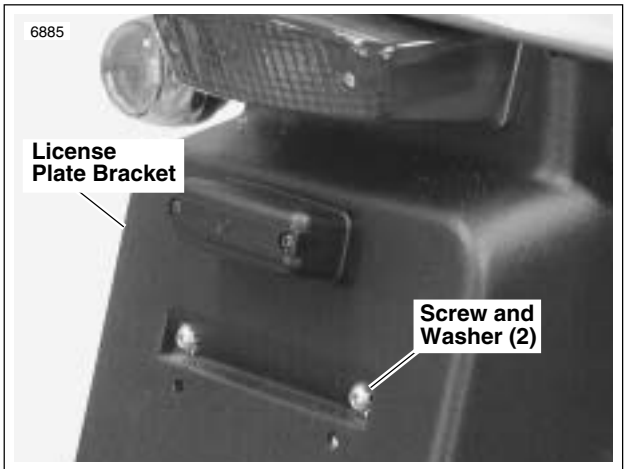

Figure 2-127. License Plate Bracket

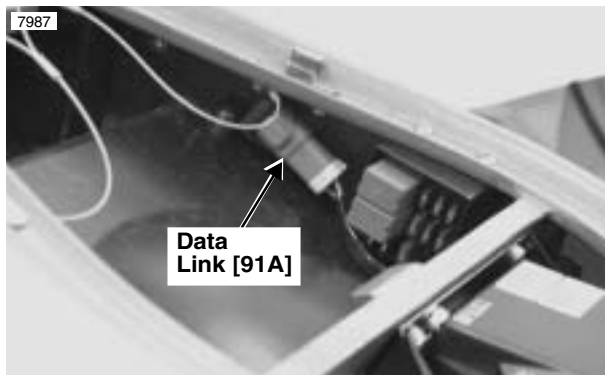

Figure 2-128. Data Link Location

REMOVAL

WARNING

To protect against shock and accidental start-up of vehicle, disconnect the negative battery cable before proceeding. Inadequate safety precautions could result in death or serious injury.

WARNING

Always disconnect the negative battery cable first. If the positive battery cable should contact ground with the negative cable installed, the resulting sparks may cause a battery explosion which could result in death or serious injury.

1. Disconnect battery cables, negative cable first.
2. Remove seat. See 2.40 SEAT.
3. Remove trunk. See 2.37 TRUNK.
4. See Figure 2-129. Remove fuse/relay block bracket fasteners (2). Remove bracket (1) containing fuse and relay blocks.
5. See Figure 2-130. Disconnect tail harness.
6. See Figure 2-131. Remove two screws and washers (1) on electronic control module (2).
7. See Figure 2-132. Remove two nuts (2) and washers (8) holding ignition module bracket (17) to tail section.
8. Remove two nuts (18), washers (19) and bolts (20) from the lower frame connection. Rotate the tail section upward and remove the two upper nuts, washers and bolts.

CLEANING

CAUTION

Do not use wheel care products or other compounds developed specifically for cleaning and polishing uncoated aluminum. These cleaners could potentially damage the tail section finish.

The cast aluminum tail section has a clear powdercoat. Because the surface is not bare polished aluminum, it must be cleaned using only mild soap and warm water. After washing, always dry the surface using a clean, soft cloth.

DISASSEMBLY

1. See Figure 2-133. Remove two nuts (metric) (4) and washers (5) from tail lamp studs to detach the tail lamp (2). Pull the three wires from back of tail lamp.
2. See Figure 2-132. Remove two allen bolts (15), washers (3) and nuts (10) to detach seat lock (11) from tail section
(14).

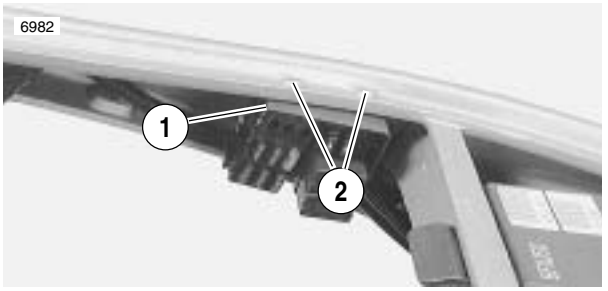

1. Fuse/Relay Block Bracket
2. Screw and Washer (2)

Figure 2-129. Fuse Block

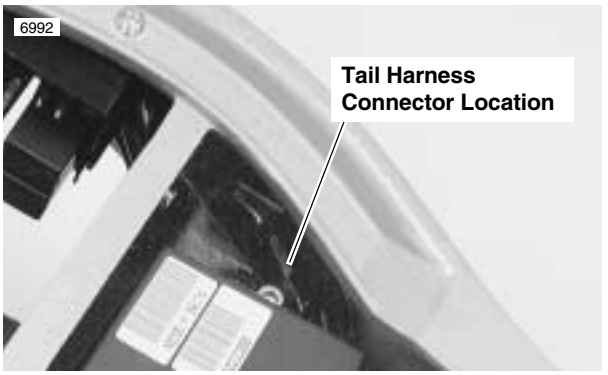

Figure 2-130. Wiring Harness

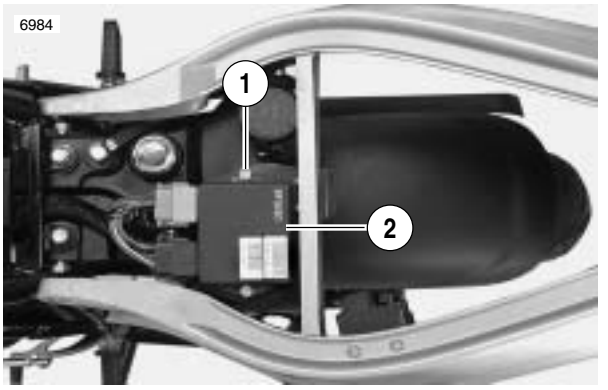

1. Screw and Washer (2)
2. Electronic Control Module (ECM)

Figure 2-131. Electronic Control Module

3. See Figure 2-133. Remove turn signal nuts (metric) (6) and washers (7). Disconnect bullet connectors.
4. Tilt license plate bracket (3) forward to remove.

1. Trunk
2. Nut (3)
3. Washer (5)
4. Washer (6)
5. Screw (2)
6. Screw (4)
7. Nut (4)
8. Washer (6)
9. Bracket, License Plate
10. Nut (2)
11. Lock Assembly
12. Holder, License Plate
13. Screw (4)
14. Tail Section
15. Screw (2)
16. Seat
17. Bracket, Electronic Control
18. Nut (4)
19. Washer (4)
20. Screw (4)

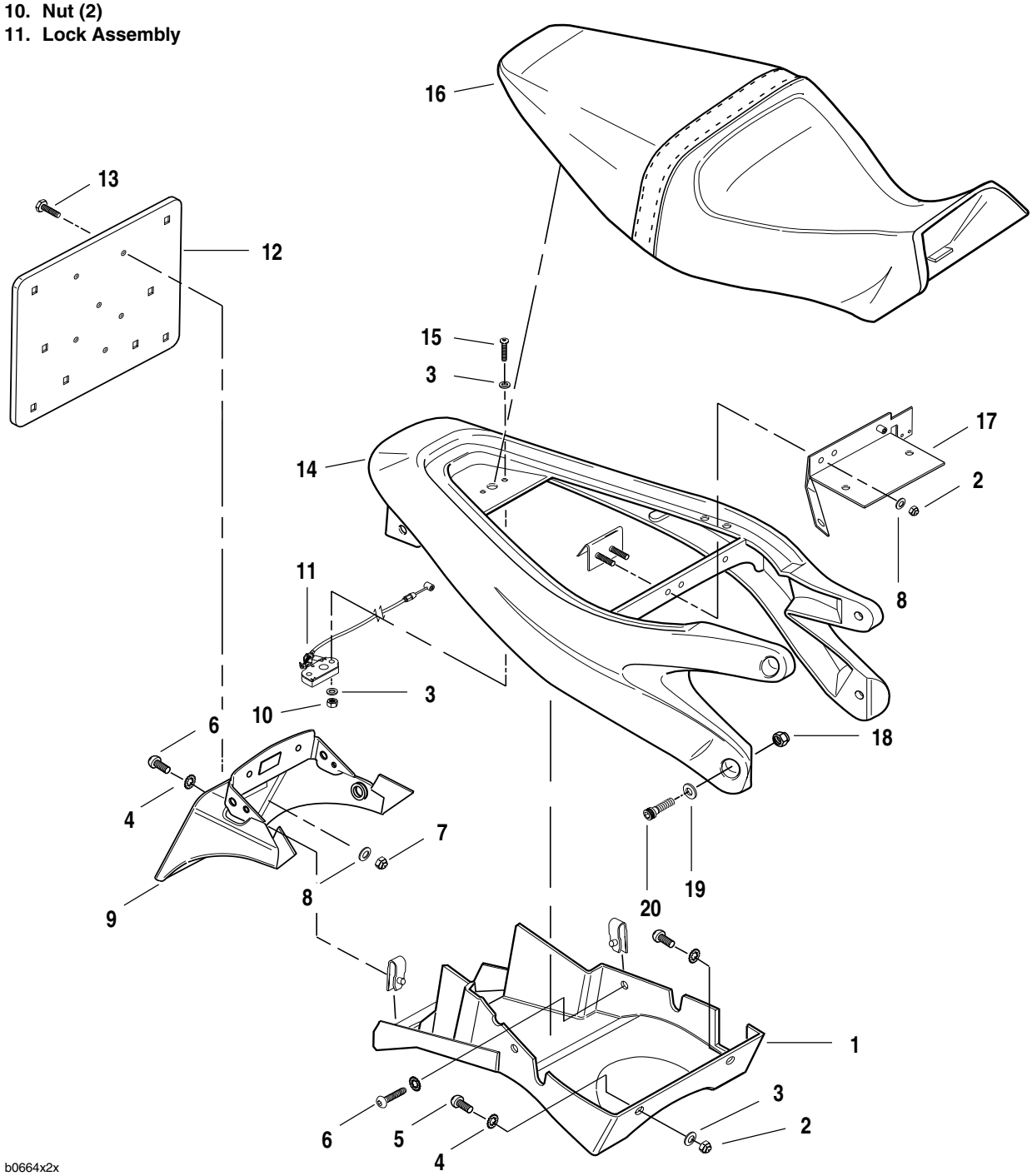

Figure 2-132. Tail Section

ASSEMBLY

1. See Figure 2-132. Slide license place bracket (9) over tail section (14).
2. See Figure 2-133. Install turn signals (1), with drain holes facing down, with star washers (7) and nuts (6) (metric). Tighten to 96-120 **in-lbs** (11-14 Nm). See 7.13 TURN SIGNALS to connect wiring.
3. Install nuts (metric) (4) and washers (5) for tail lamp (2). Do not connect wires until after installation.
4. See Figure 2-132. Attach seat lock (11) with allen bolts (15), washers (3) and nuts (10). Tighten to 20-25 **in-lbs** (2-3 Nm).

INSTALLATION

1. Align upper and lower mounting holes on both sides of the tail section.
2. See Figure 2-132. Loosely install upper bolts (20), washers (19) and nuts (18) and check wiring and parts clearances.
3. Install the two other bolts, washers and nuts. Do not allow ignition module bracket below top of tail.
4. Bundle lighting wiring between seat lock and seat lock catch housing.
5. Attach wiring harness to main harness.
6. Attach bracket for ignition module (17) with nuts (2) and washers (8). Install module with two bolts and star washers.
7. Fully tighten four tail section bolts (20) to 9-11 ft-lbs (12-15 Nm).
8. Route transmission vent tube along the right side.
9. See Figure 2-129. Install fuse/relay bracket with two screws and washers.
10. See Figure 2-132. Install trunk (1) to fit inside of clips. Loosely install front bolts (5), nuts (2) and washers (3, 4). Loosely install license plate bracket (9) screws (6) and washers (4) finalize trunk alignment. Install middle fasteners (6) with washers. Tighten all fasteners.

⚠WARNING

After installing seat, pull upward on front of seat to be sure it is locked in position. If seat is loose, it could shift during vehicle operation and startle the rider, causing loss of control which could result in death or serious injury.

11. Install seat. See 2.40 SEAT.

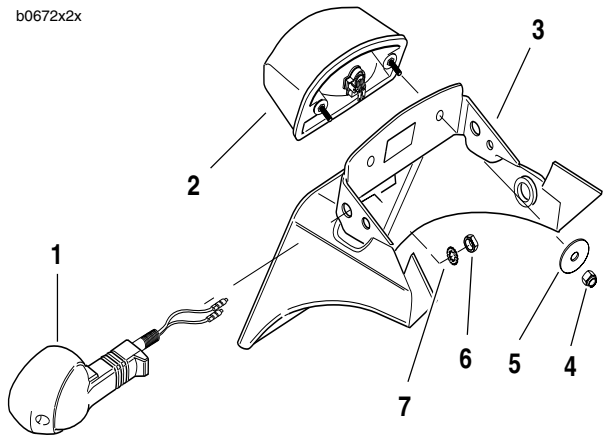

1. **Turn Signal, Rear**
2. **Tail Light**
3. **Tail Light Mounting Bracket**
4. **Washer**
5. **Nut**
6. **Nut (metric)**
7. **Star Washer**

Figure 2-133. Tail Light/Rear Turn Signals

⚠WARNING

Always connect positive battery cable first. If the positive cable should contact ground with the negative cable installed, the resulting sparks may cause a battery explosion which could result in death or serious injury.

12. Connect battery cables, positive cable first.

⚠WARNING

Check for proper turn signal operation before riding motorcycle. Visibility is a major concern for motorcyclists. Failure to have proper turn signal operation could result in death or serious injury.

13. Check the following. If operation fails, reread procedure and verify that all steps were performed.
    a. Rear turn signals.
    b. Brake lamp.
    c. License plate light.

WINDSCREEN 2.39

REMOVAL

1. See Figure 2-134. Remove two screws and nylon washers on each side.
2. If necessary, remove both windscreen brackets following procedure under 2.16 FRONT FORK.

INSTALLATION

1. If removed, install both windscreen brackets. See 2.16 FRONT FORK.
2. Align windscreen on right and left brackets.
3. See Figure 2-134. Install two screws and nylon washers on each side. Tighten securely.

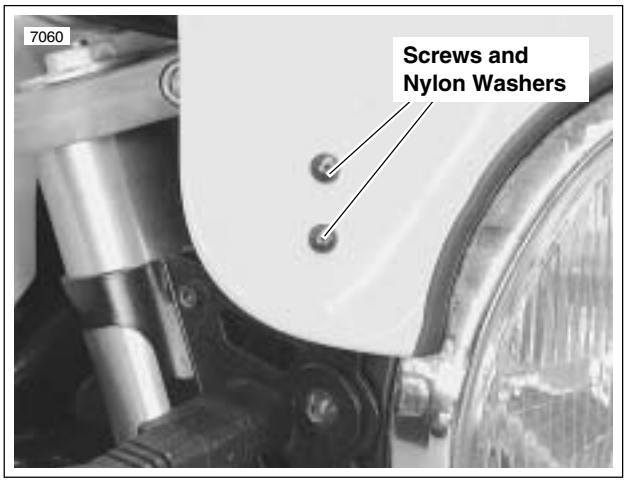

Figure 2-134. Windscreen, Right Side

REMOVAL

NOTE
Depending upon vehicle production date, lock orientation may vary from Figure 2-135.

1. Place ignition key in seat lock and turn.

CAUTION

Do not place keys in underseat storage area. If seat is installed, keys will not be accessible.

2. Lift seat and remove.

INSTALLATION

1. Install seat by sliding metal locating tab on underside of seat into opening on motorcycle.
2. Press down on seat until seat catch clicks.

⚠WARNING

After installing seat, pull upward on front of seat to be sure it is locked in position. If seat is loose, it could shift during vehicle operation and startle the rider, causing loss of control which could result in death or serious injury.

3. Turn ignition key and remove from seat lock.

ATTACHMENT POINTS

CAUTION

Helmet hook will not prevent helmet theft. See your Buell dealer for helmet locking solutions.

See Figure 2-136. Two metal hooks, cables and locktabs on the tail section serve as helmet holders. To store helmet, place cable through helmet D-ring. Place D-ring on helmet hook and route cable loop under locktabs. Install and lock seat to store helmet while motorcycle is stationary.

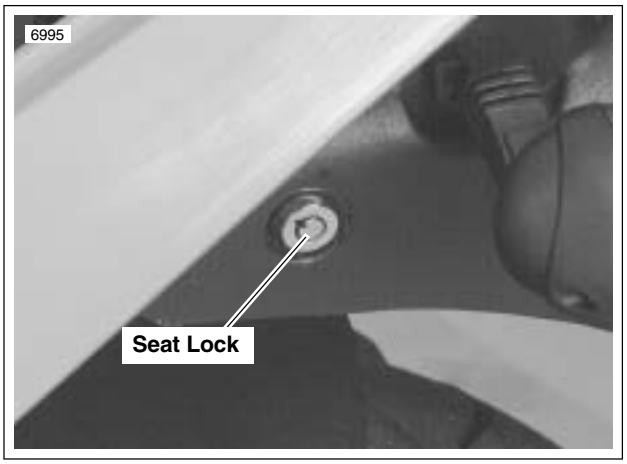

Figure 2-135. Seat Lock

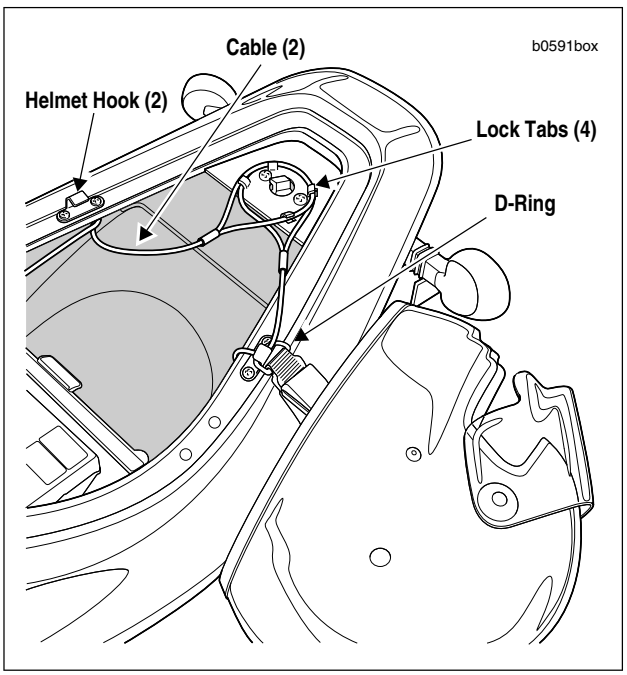

Figure 2-136. Helmet Hook

SIDE STAND 2.41

GENERAL

⚠WARNING

- **If the side stand is not in the full forward position when vehicle weight is rested on it, the vehicle could fall over, which could result in death or serious injury.**
- **Always park motorcycle on a level, firm surface. Vehicle weight could cause motorcycle to fall over, which could result in death or serious injury.**

The side stand is located on the left side of the motorcycle. The side stand swings outward to support the motorcycle for parking.

See Figure 2-137. The side stand activates the side stand switch which is part of the starter interlock system. See 7.5 STARTER INTERLOCK for more information.

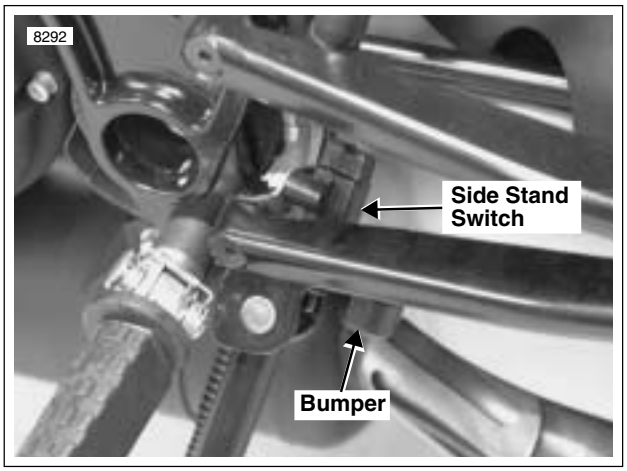

Figure 2-137. Side Stand Switch

REMOVAL/DISASSEMBLY

1. Raise rear wheel off floor using REAR WHEEL SUPPORT STAND (Part No. B-41174).
2. See Figure 2-138. Remove spring (6) from side stand and spring pin (5).
3. Remove retaining clip (7) and pivot pin (8). Detach side stand from frame.
4. Remove bumper (3) from frame.
5. Remove screw (2) and side stand dragger (1).

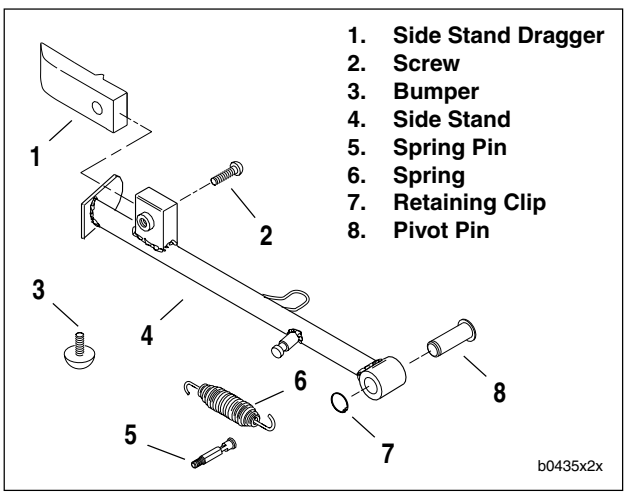

Figure 2-138. Side Stand

INSPECTION

1. Replace dragger when worn to wear line shown in Figure 2-139.
2. Test the side stand in the following manner. Without vehicle weight resting on it, side stand should move freely into extended (down) and retracted (up) positions.
3. Check sidestand switch (starter interlock) for proper operation after the first 500 miles and every 2500 miles thereafter. See 7.5 STARTER INTERLOCK.

Figure 2-139. Side Stand Dragger Wear Limit

ASSEMBLY/INSTALLATION

1. See Figure 2-138. Attach bumper (3) to frame.
2. Attach side stand dragger (1) to side stand with screw (2).
3. Apply LOCTITE ANTI-SEIZE to pivot pin (8). Install side stand using pivot pin (8) and retaining clip (7). Do not crush side stand switch during installation.
4. Connect spring (6) to side stand and spring pin (5).
5. Remove REAR WHEEL SUPPORT STAND (Part No. B-41174).
6. With side stand retracted, there should be 0.5 in. (12.7 mm) clearance between side stand and swingarm at the closest point of contact.

NOTES